MONUMENT BUILDING FOR THE:

CITY OF STOCKBRIDGE

Stockbridge, Georgia

For: City of Stockbridge

AIKIN DESIGN ARCHITECTS, LLC
Architecture-Planning
Construction Administration
Offices: Fayetteville and Decatur, Georgia
Office Phone: 770-461-6980
E-mail: aikindesignarch@att.net

FALCON DESIGN
ENGINEERING PLANNING SURVEYING

GENERAL NOTES

1. "Typical" means the referenced detail shall apply for all similar conditions unless otherwise noted.
2. The contractor shall be responsible for field verifying all dimensions and conditions of contract documents prior to ordering of materials and proceeding with the work. The contractor is to notify the designer of all discrepancies and questions and obtain required clarification prior to proceeding with the work.
3. Do not scale drawings. Dimensions govern.
4. Contractor will be responsible for acquiring and following manufacturer's specifications for all equipment, materials, and construction systems.
5. All adverse conditions of site and building discovered during work must be reported to owner immediately.

RELEASED FOR BID ONLY 11-6-13

CODE INFORMATION

BUILDING INFORMATION	
OCCUPANCY CLASSIFICATION (SECTION 304)	N/A
CONSTRUCTION TYPE (TABLE 500)	TYPE IIIB
BUILDING AREA	233 S.F.
BUILDING AREA ALLOWED(TABLE 503)	8500 S.F.
NUMBER OF STORIES	1
NUMBER OF STORIES ALLOWED (TABLE 503)	2
BUILDING HEIGHT	40'-0"
BUILDING HEIGHT ALLOWED(TABLE 503)	55'-0"
SPRINKLERED	NO
OCCUPANT LOAD (TABLE 1003.2.2.2)	

APPLICABLE CODES

INTERNATIONAL BUILDING CODE, 2006 EDITION WITH GEORGIA AMMENDMENTS
RULES AND REGULATION OF THE SAFETY FIRE COMMISSIONER FOR THE STATE MINIMUM FIRE SAFETY STANDARDS, CHAPTER 120-3-3 MARCH 9, 2010 (GEORGIA SAFETY FIRE LAW)
NATIONAL FIRE PROTECTION ASSOCIATES (NFPA) 101 LIFE SAFETY CODE, 2000 EDITION WITH GEORGIA AMMENDMENTS
INTERNATIONAL FUEL GAS CODE, 2006 EDITION WITH GEORGIA AMMENDMENTS
INTERNATIONAL MECHANICAL CODE, 2006 EDITION WITH GEORGIA AMMENDMENTS
INTERNATIONAL PLUMBING CODE, 2006 EDITION WITH GEORGIA AMMENDMENTS
NATIONAL ELECTRICAL CODE, 2011 EDITION WITH GEORGIA AMMENDMENTS
STANDARDS FOR ACCESSIBLE DESIGN, 2010 EDITION
INTERNATIONAL ENERGY CONSERVATION CODE, 2009 EDITION WITH GEORGIA AMMENDMENTS
INTERNATIONAL FIRE CODE, 2006 EDITION WITH GEORGIA AMMENDMENTS

NO CHANGES OR REVSIONS TO THE APPROVED CONSTRUCTION DOCUMENTS ARE TO BE MADE WITHOUT THE EXPRESSED WRITTEN CONSENT OF AIKIN DESIGN ARCHITECTS, LLC

PROJECT CONTACTS

OWNER

CITY OF STOCKBRIDGE

ARCHITECTURE

AIKIN DESIGN ARCHITECTS, LLC
Contact-Gregg Aikin
Phone No. 770-461-6980

CIVIL ENGINEERING

FALCON DESIGN CONSULTANTS
Contact: Adam Price
Phone No. 770-389-8666

STRUCTURAL ENGINEERING

VEST ENGINEERING, INC.
Contact: Stephan Tremblay, PE
Phone: 404-218-9579

GENERAL CONTRACTOR

DRAWING INDEX

TITLE SHEET

CIVIL ENGINEERING
C-1.0 - Civil Cover Sheet
C-2.0 - Civil General Notes
C-3.0 - Existing Conditions Plans
C-4.0 - Erosion Control Plan
C-5.0 - Site Plan
C-6.0 - Grading and Drainage Plan
C-7.0 - Landscape Plan
C-8.0 - Erosion Control Details
C-8.1 - Erosion Control Details
C-8.2 - Erosion Control Details
C-9.0 - Landscape Details
C-9.1 - Landscape Details
C-10.0 - Lighting Plan

ARCHITECTURAL
A-1 - Exterior Elevations and Floor Plans
A-2- Sections and Details
A-3 - General Notes and Details
A-4 - Specification of Materials
E-1 - Electrical Plans and Details
S-1 - Structural Plans and Details

ABBREVIATIONS

C	CARPET
EP	ELECTRICAL PANEL
F	FLUSH
FE	FIRE EXTINGUISHER
GB	GYPSUM BOARD
NIC	NOT IN CONTRACT
R	RUBBER
VCT	VINYL COMPOSITION TILE
W	WOOD
N/A	NOT APPLICABLE

GRAPHIC SYMBOLS

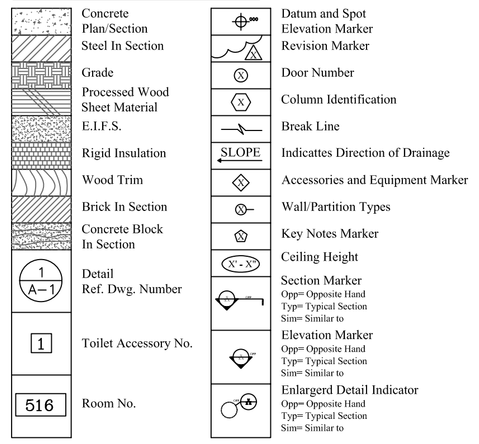

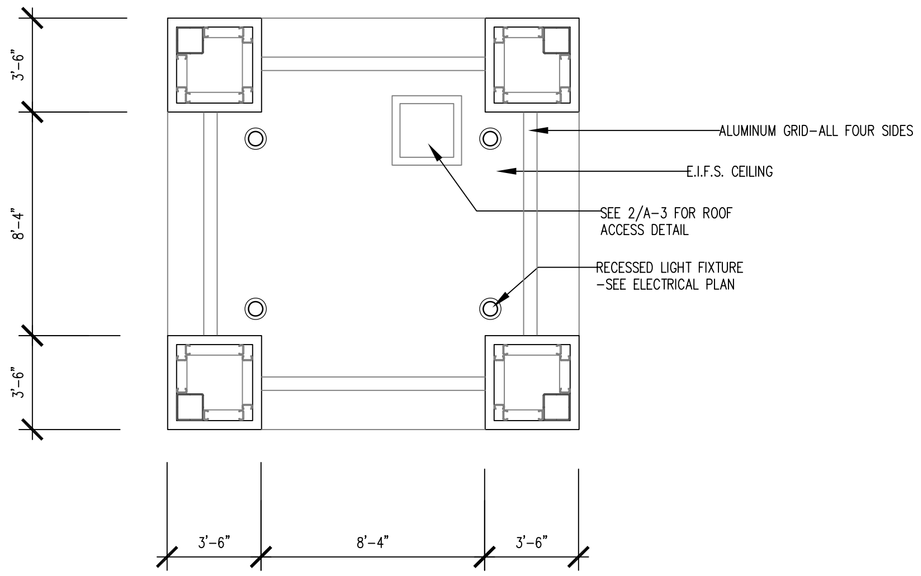

5 / A-1 UPPER LEVEL REFLECTED CEILING PLAN
SCALE: 1/4"=1'-0"

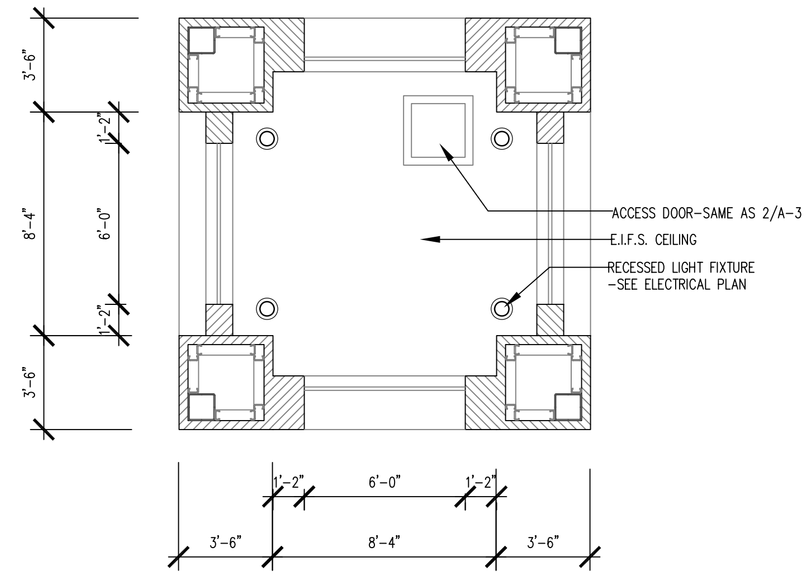

4 / A-1 GROUND LEVEL REFLECTED CEILING PLAN
SCALE: 1/4"=1'-0"

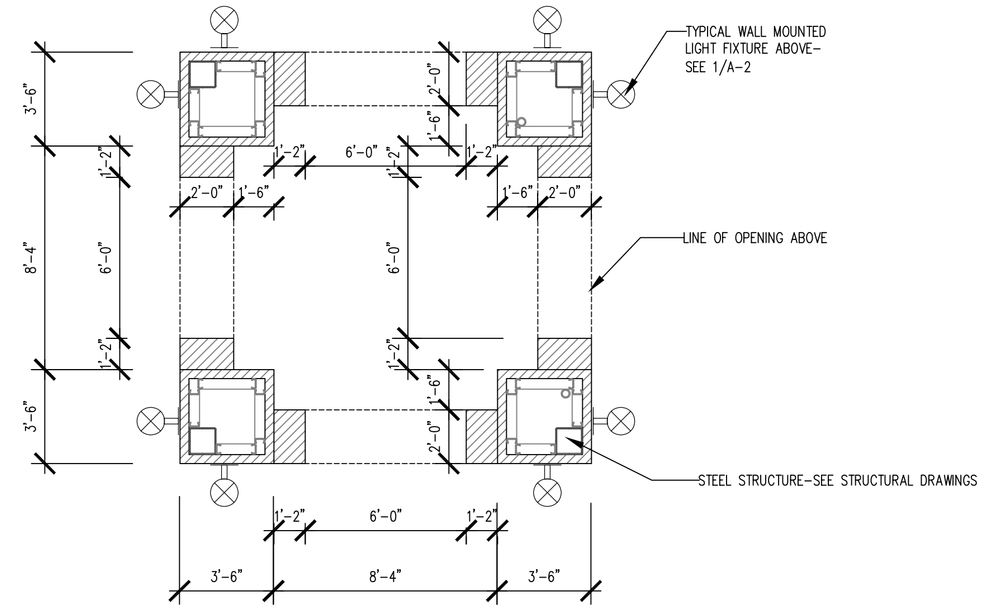

3 / A-1 BUILDING FLOOR PLAN
SCALE: 1/4"=1'-0"

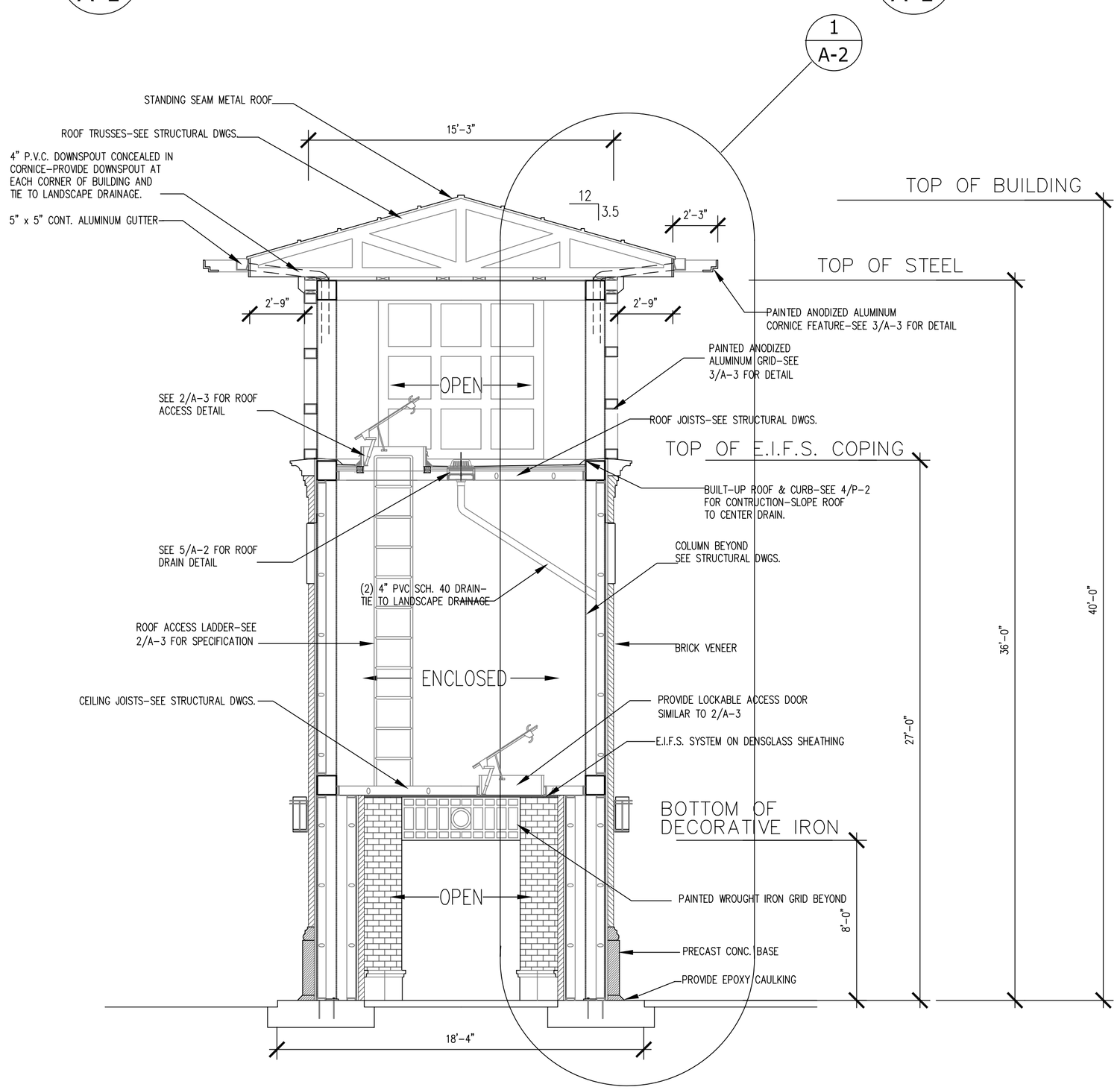

2 / A-1 TRANSVERSE BUILDING SECTION
SCALE: 1/4"=1'-0"

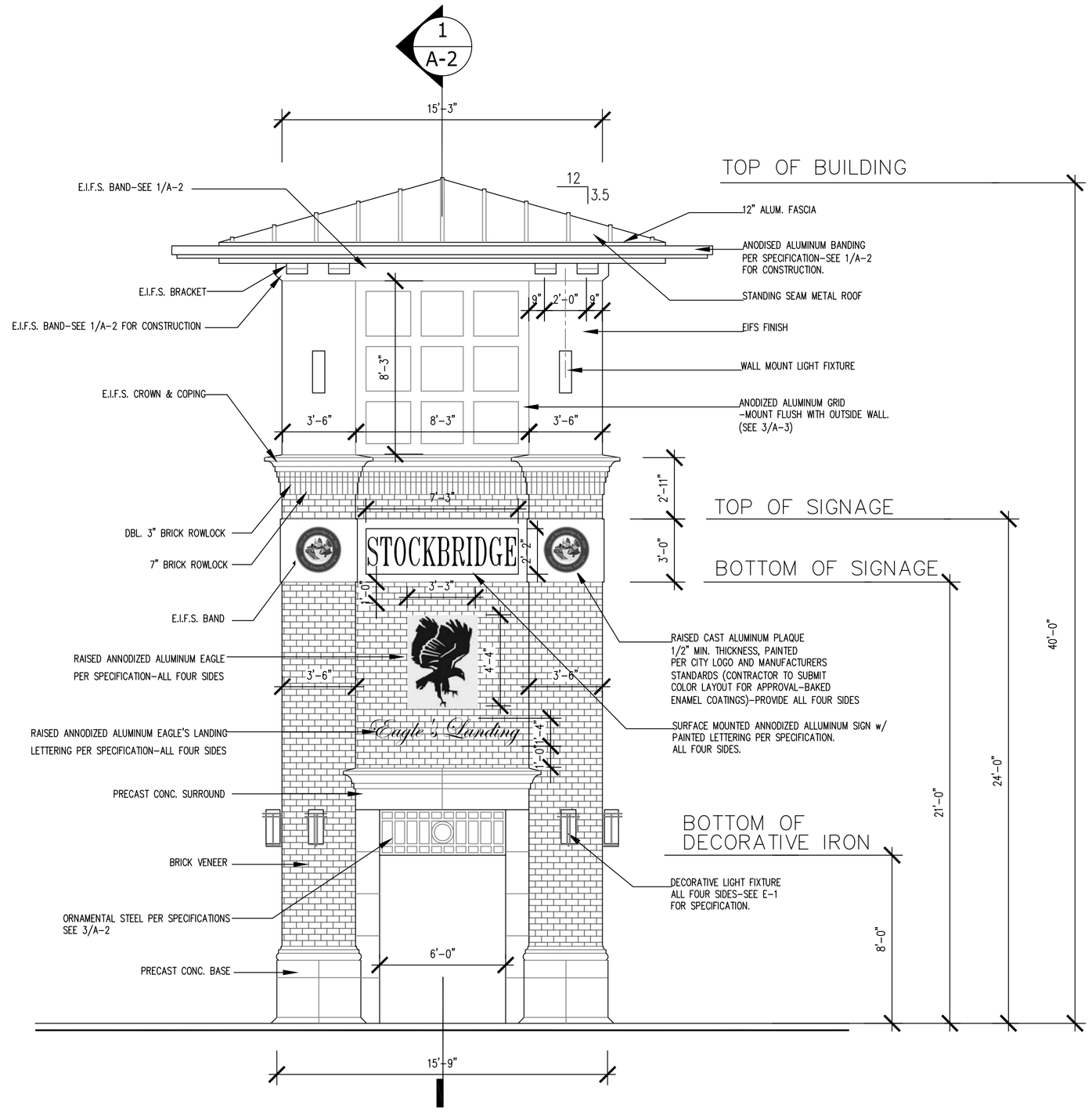

1 / A-1 TYPICAL BUILDING ELEVATION
SCALE: 1/4"=1'-0"

AIKIN DESIGN ARCHITECTS, LLC
Architecture-Planning
Construction Administration
Offices: Fayetteville and Decatur, Georgia
Office Phone: 770-461-6980
E-mail: aikindesignarch@att.net

Copyright 2013 by AIKIN DESIGN ARCHITECTS, LLC

AIKIN DESIGN ARCHITECTS, LLC assumes no liability for any building constructed from these plans and the owner/contractor must verify all dimensions and construction techniques indicated here prior to proceeding with construction.

The plans, elevations, drawings, illustrations, and other material contained within this set are the exclusive property of AIKIN DESIGN ARCHITECTS, LLC. All rights reserved.

STOCKBRIDGE MONUMENT
Stockbridge, Georgia

RELEASED FOR BID	11-6-13

DRAWN BY:

PROJECT:

PLAN NO.

A-1

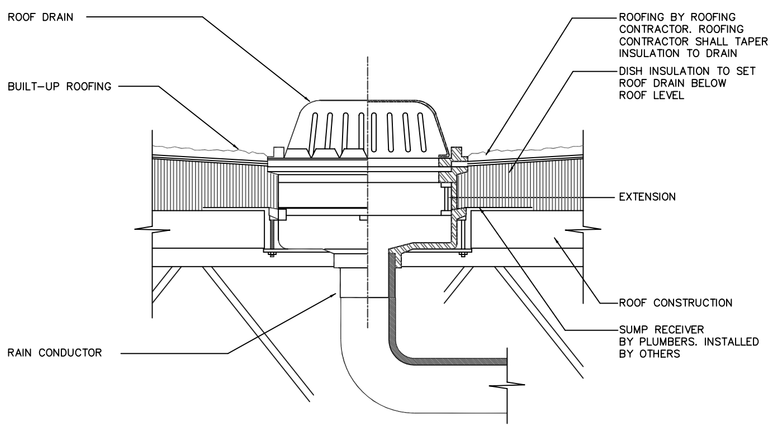

5 / A-2 INTERIOR ROOF DRAIN DETAIL

SCALE: N.T.S.

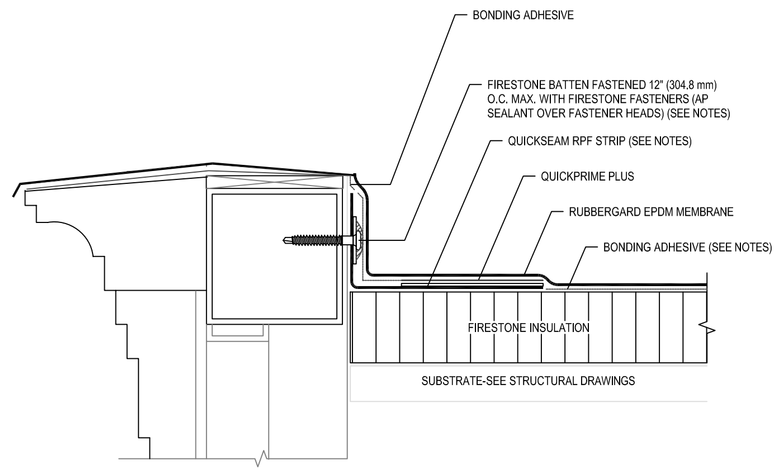

4 / A-2 ROOFING CURB DETAIL

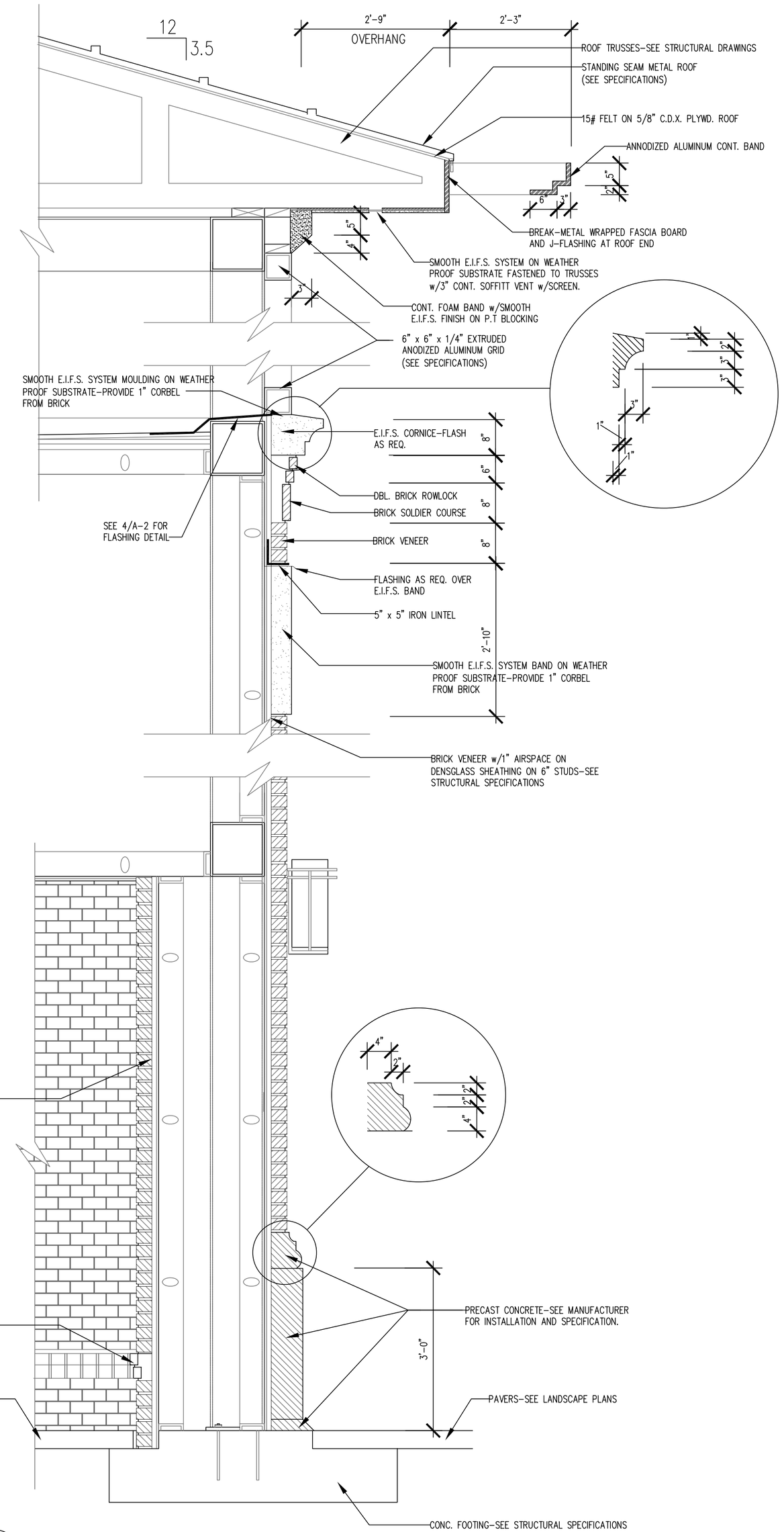

1 / A-2 TYPICAL BUILDING CORNER SECTION

SCALE: 3/4"=1'-0"

NOTE: VERIFY EXACT DIMENSIONS WITH BUILDING CONSTRUCTION IN THE FIELD

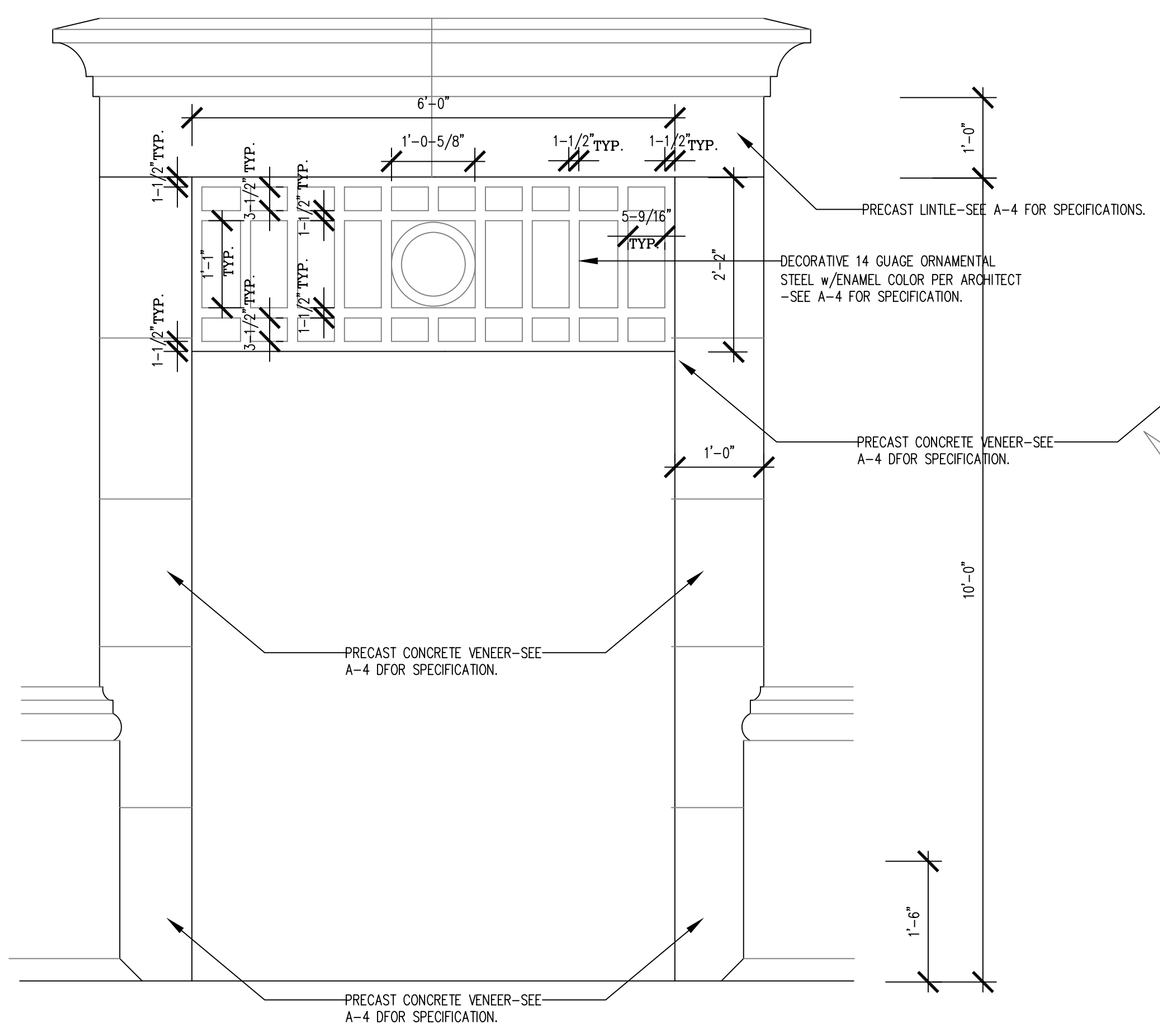

3 / A-2 TYPICAL BUILDING ENTRANCE ELEVATION

SCALE: 3/4"=1'-0"

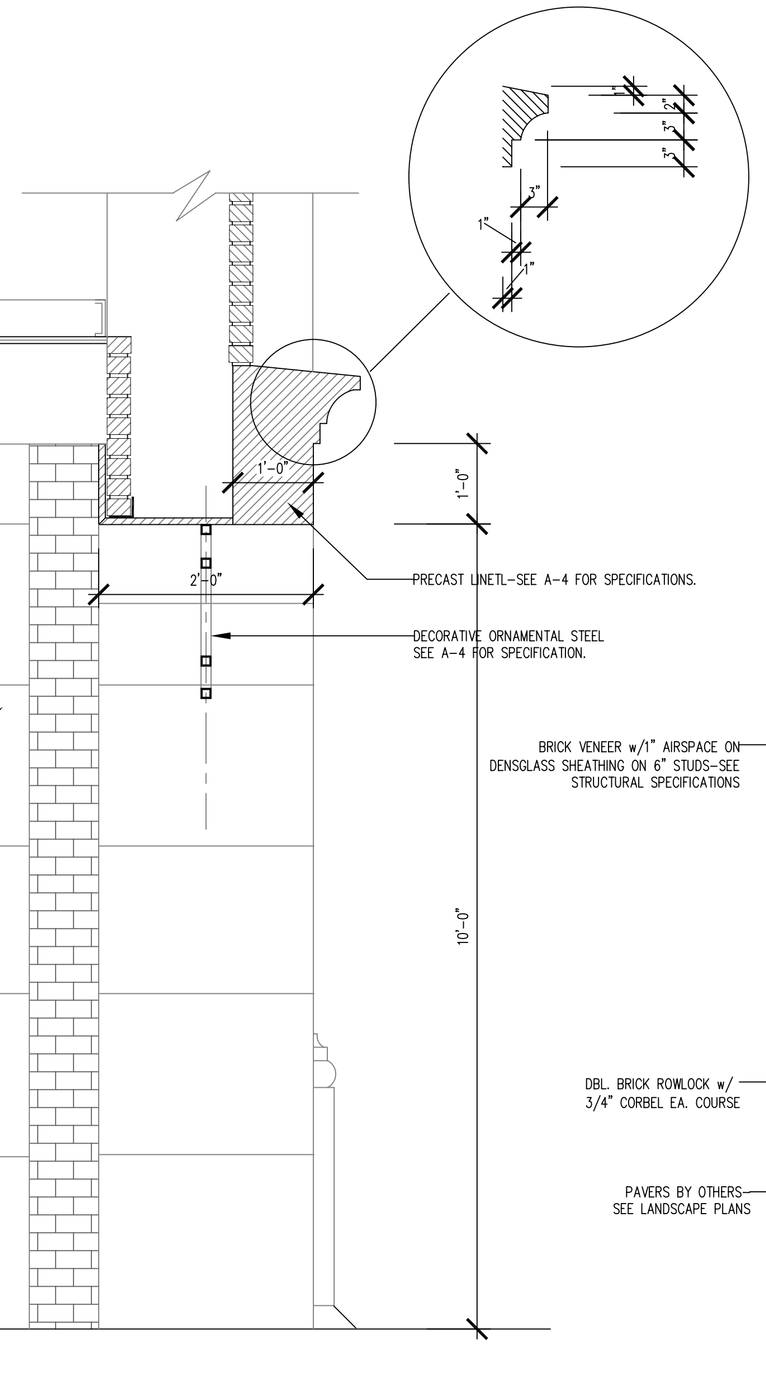

2 / A-2 TYPICAL BUILDING ENTRANCE SECTION

SCALE: 3/4"=1'-0"

AIKIN DESIGN ARCHITECTS, LLC
Architecture-Planning
Construction Administration
Offices: Fayetteville and Decatur, Georgia
Office Phone: 770-461-6980
E-mail: aikindesignarch@att.net

Copyright 2013 by AIKIN DESIGN ARCHITECTS, LLC

AIKIN DESIGN ARCHITECTS, LLC assumes no liability for any building constructed from these plans and the owner/contractor must verify all dimensions and construction techniques indicated here prior to proceeding with construction.

The plans, elevations, drawings, illustrations, and other material contained within this set are the exclusive property of AIKIN DESIGN ARCHITECTS, LLC. All rights reserved.

STOCKBRIDGE MONUMENT

Stockbridge, Georgia

RELEASED FOR BID	11-6-13

DRAWN BY:

PROJECT:

PLAN NO.

A-2

General Notes & Requirements:

1. CODES– All work to conform to requirements of the Standard Building Code, the NFPA 101 Life Safety Code, the Standard Fire prevention Code, the State of Georgia handicap law, the Americans with Disabilities Act, all codes pertaining to electrical, plumbing, mechanical (HVAC), fire protection and all other codes, regulations or ordinances in force at the time the work is permitted. Request clarification from local building authorities if conflicts are discovered which result from recent modifications or additional requirements of codes, ordinances or regulations, and notify Architect immediately. Editions of codes in force at the time of permitting shall govern.

2. OSHA– General and subcontractors shall insure that all work activities comply fully with applicable OSHA requirements at all times. Strictly follow all instructions, recommendations and requirements published or provided by manufactures of products and materials to be incorporated into work.

3. SKILL, EXPERIENCE & INSTALLATION– All work shall be performed only by persons properly trained, experienced and skilled in specific work. Provide safety barricades, warning signs, protective and dust proof enclosures, ventilation and other safety related equipment, measures necessary to protect persons and property from damage or injury. Insure that easily identifiable and accessible fire extinguishers and first aid kits, in adequate supply, are located throughout the job site at all times. Provide easy and identifiable access to a working telephone or other means of communications device for purpose of contacting emergency medical assistance. All materials, manufactured items and equipment shall be installed in strict accordance with manufacturer's published instructions and only in conditions meeting manufacturer's requirements or suggestions.

4. INSURANCE– General and subcontractors shall maintain and keep in force workman's comp insurance, liability and other insurance coverage as may be required in the construction contract or by state law for duration of the project.

5. COORDINATION– General contractor shall supervise and coordinate the work of all trades so as not to prolong the work or create hazardous conditions.

6. ASSIGNMENT OF WORK– it is the responsibility of the general contractor to assign and distribute all phases of the work among his subcontractor and labor pool. He and he alone shall be responsible that all aspects of the work included in his bid and that it is executed. He shall have pre–bid meeting with all major subcontractors to coordinate the distribution of work to insure that all aspects of the work is properly distributed. This is especially important with items which could fall into more than one category of work.

7. UTILITY DISCONNECTIONS & CONNECTIONS– General and subcontractors shall coordinate permanent and temporary disconnections and connections of utilities so as not to create potentially harmful or hazardous conditions which could cause harm to persons or property. Notify utility companies (or UPC) prior to excavation or demolition or doing anything which could interrupt or damage utility services above or blow ground. Such notification shall be in the manner prescribed by the utility company and in compliance with state law.

8. EXISTING CONDITIONS– General and subcontractors shall visit the site and examine all existing conditions. They shall field verify and field measure all existing conditions effecting or effected by the new work. They shall carefully examine condition of all utility services and lines and propose corrective measures where needed. They shall inquire as to the existence of any available drawings or other documents which may show existing conditions above or below ground. General contractor shall contact local utility companies such as electric, gas and water to ascertain location of underground utilities. Notify appropriate persons if discrepancies are discovered before performing further work.

9. PERMITS– No work shall be performed without appropriate permit(s).

10. ENVIRONMENTAL ISSUES– all environmental issues are sole responsibility of owner. Neither architect, engineer(s), general contractor, or subcontractors are responsible for discovery, testing or removal of any hazardous material as part of their scope of work unless specifically stipulated by written agreement. If, during the course of work, the general contractor or subcontractors discover hazardous materials or conditions why shall notify the owner's representative by phone and in writing immediately, before proceeding with the work, so that a safe appropriate course of action can be decided upon.

11. AMERICANS WITH DISABILITIES ACT– Owner has ultimate responsibility to comply with the Americans with Disabilities Act and the state handicap law. Published documentation describing these requirements shall be provided upon request. The ADA is a civil rights law– not a building code. Oversight of a non–complying item by a local building official will not relieve the owner his responsibility under Federal law. The architect bears no responsibility for owner's decision to not fully comply.

12. TEMPORARY BRACING– All new walls to be temporarily braced while they are being constructed. Install permanent bracing as soon as practical. Do not remove temporary bracing until permanent bracing or other forms of securement are in place. At any demolition areas brace and support all wall, floor and roof structures securely for safety of persons and property.

13. WORK SCHEDULE– General contractor shall verify proposed work schedule with owner's representative prior to bidding the work. After work commences he shall continue to verify schedule with owner's representative if changes are needed.

14. WARRANTIES & GUARANTIES– General contractor shall provide written warranties and guarantees to owner along with operation manuals on all equipment as part of project close–out. These documents shall be as required by the contract.

15. SHOP DRAWINGS & SUBMITTAL DATA– Shop drawings and submittal data shall be reviewed for general conformance with architectural or engineering design concepts and compliance with contract documents. Do not submit a change request by way of shop drawing or submittal data without first bringing the matter to the architect's or engineer's attention. If an item is submitted to the architect or engineer and it is reviewed and if it is different that what is called for in the construction documents, the review does not constitute an approval of the change, nor does a review of shop drawings and submittal data relieve the general items where proper fit and function depend on the work of others or existing conditions, field verify all conditions and dimensions. General contractor shall review shop drawings and signify that he has done so before submitting them to the architect or engineer(s). The architect and engineer(s) are not responsible for checking dimensions or verifying the proper structural member selections have been made. Fabrication processes, construction techniques, dimensioning and coordination of work by all trades is the sole responsibility of the general contractor. At a minimum, when applicable, provide complete descriptive shop drawings on structural steel, miscellaneous steel, stairs, steps, ramps, handrails, and guardrails, cabinetwork, casework and millwork, trim, doors, frames and hardware, glass framing systems and windows, roof and all flashing, toilet partitions, mechanical equipment, plumbing fixtures and trim, electrical equipment, lighting, panels, ect. When design load requirements are to be met for code compliance, such as for impact load on guardrails or wind load on glass, and the design of an item is provided by an outside fabricator or vendor, the fabricator or vendor shall provide the engineering calculations needed to show that the required load capacity has been met and the design is in full compliance with applicable codes. Further, he shall furnish engineer's certificate or certified drawings if requested by architect, engineer(s) or building officials. This certification shall be provided at no additional cost to the owner, project architect or project engineer(s). Provide architect with two copies of submitted material which he can keep in his possession along with the copies to be returned to the submitter.

16. CONNECTION OF MATERIALS– Provide only non–corrosive nails and/or connectors as specified by the structural drawings for connection of all construction materials.

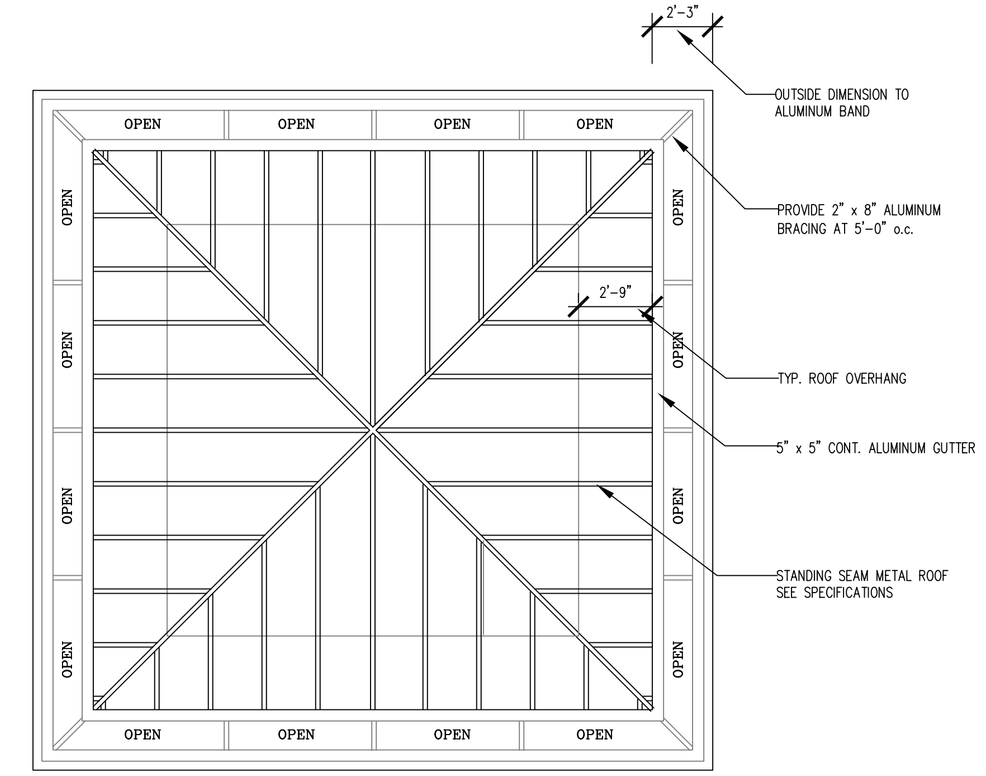

3 / A-3 ROOF PLAN

SCALE: 1/4"=1'–0"

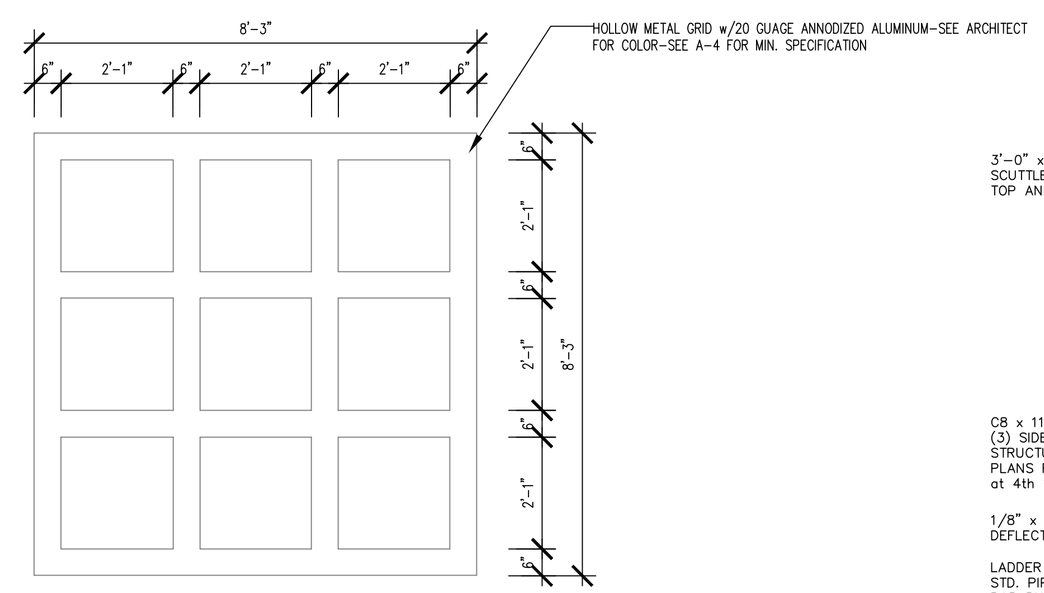

NOTE: VERIFY EXACT DIMENSIONS WITH BUILDING CONSTRUCTION IN THE FIELD

1 / A-3 ENLARGED ALUMINUM GRID

SCALE: 1/2"=1'–0"

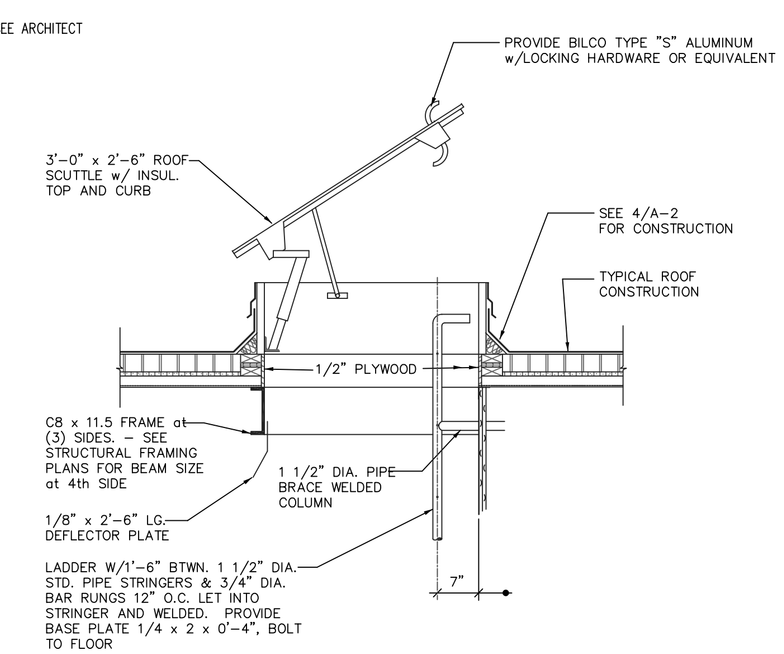

2 / A-3 ROOF ACCESS DOOR DETAIL

SCALE: N.T.S.

AIKIN DESIGN ARCHITECTS, LLC
Architecture-Planning
Construction Administration

Offices: Fayetteville and Decatur, Georgia
Office Phone: 770-461-6980
E-mail: aikindesignarch@att.net

Copyright 2013 by AIKIN DESIGN ARCHITECTS, LLC

AIKIN DESIGN ARCHITECTS, LLC assumes no liability for any building constructed from these plans and the owner/contractor must verify all dimensions and construction techniques indicated here prior to proceeding with construction.

The plans, elevations, drawings, illustrations, and other material contained within this set are the exclusive property of AIKIN DESIGN ARCHITECTS, LLC. All rights reserved.

STOCKBRIDGE MONUMENT

Stockbridge, Georgia

RELEASED FOR BID	11–6–13

DRAWN BY:

PROJECT:

PLAN NO.

A-3

Specification of Materials:

Wood and Plastics:

1. Carpentry: Provide carpentry work specified as shown on drawings. Provide framing lumber , nailers, blocking, pressure treated lumber for all blocking, ground furring, nailers and other used indicated in conjunction with any pressure treated llumber required in drawings. All wood in contact with concrete, masonry shall be pressure treated. Factory-mark each piece of lumber and plywood with type, grade, mill and grading agency.

2. See sheet A-9 for specifications of structural wood, plywood and fasteners.

3. Interior Wood Trim: Provide kiln-dried finish grade white pine or fir in recommended grades and applications according to the most recent edition of the "Southern Pine Use Guide" published by the Southern Forest Products Association, with moisture content of 8 to 13 percent in shapes and sizes shown on drawings.

Ceiling & Soffit Finish System:

1. Scope of Work- Furnish all labor, materials, equipment, services and other apparatus to complete installation of ceiling & soffit finish system. Ceiling & soffit finish system shall consist of an inner layer of 1/2" board insulation, Densglass brand or equal, a glass-fiber-mesh-reinforced base coat applied directly to board and a smooth finish protective finish coat.

2. Designation PM for class of ceiling and soffit finish system specified in this section is based on the classification developed by the Exterior Insulation Manufacturers Association.

3. Manufacturer:
   Dryvit Systems, Inc.
   Insul/Crete Co., Inc.
   Simplex Div., Anthony Industries, Inc.

4. Materials

Compatibility: Provide board insulation, reinforcing fabric, base and finish coat materials, mechancial anchors, and accessories that are compatible with one another and approved for use by system manfacturer.

5. Color and texture of protective coating as selected by Architect.

6. Substrate to be $\frac{5}{8}$" "Densglass" or equal.

7. Mechanical Fasteners: system manfacturer's standard corrosion-resistant fastener assemblies.

8. Trim Accessories: Weep bases, corner beads, casing beads and control joints. Material will be either solid zinc or G90 galvanized metal or PVC and per system manfacturer's requirements;

9. Expansion Joints: Continuous expansion joints shall be installed where the building system abuts other materials, where the substrated changes, where expansion joints occur in the substrate, or where building expansion joints occur. Continuous control joints shall be constructed of back to back casing bead with a minimum of 3/8" separation to receive backer rod and sealant, or may be constructed from a single component accessory. Isolation joints are required around all wall penetrations, including doors and windows.

Roofing Materials:

1. Scope of Work- Furnish all labor, materials, equipment, services and other apparatus to complete installation of roofing systems.

2. Special Project Warranty: Submit a written warranty, executed by manfacturer, agreeing to repair or replace metal roofing in materials or workmanship within the specified warranty period. Failures include but are not limited to deformation or deterioration of material beyond normal weathering. This warranty shall be in addition to, and not a limitation of, other rights the Owner may have against the Contractor under the Contract Documents. Warraty period is 20 years after date of Substantial Completion.

2. Manufacture:

   McElroy Metal Corporation or Equal

3.Metal roofing shall be "Medallion II" standing seam with 1-1/2"batten, UL Class "A" , 12" width, 24 guage galvalume unless otherwise specified. Roofing complies with ASTM E 1680 and 1646, bearing UL Class "A" external fire exposure label and UL "Wind Resistant" label.

4. Hip and ridge roofing as specified by metal roofing manufacturer.

5. Provide selections made by Architect from manfacturer's full range of standard colors, textures, and patterns for metal roofing of type indicated.

6. Felt underlayment shall be 30# unperforated organic felt complying with ASTM D 226, Type I; 36" wide.

7. Nails shall be aluminum , 11-or 12-guage, sharp pointed, conventional roofing nails with barbed shanks, minimum 3/8" diameter head, and of sufficient length to penetrate 3/4" into solid decking or to penetrate through plywood sheathing.

8. Metal drip endge shall be as specified by roofing manufacturer.

Brick and Mortar:

1. Scope of Work- Furnish all labor, materials, equipment, services and other apparatus to complete installation of roofing systems.

2. Special Project Warranty: Submit a written warranty, executed by manfacturer, agreeing to repair or replace brick and mortar in materials or workmanship within the specified warranty period. Failures include but are not limited to deformation or deterioration of material beyond normal weathering. This warranty shall be in addition to, and not a limitation of, other rights the Owner may have against the Contractor under the Contract Documents.

2. Brick Manufacture and Type:

   Old Virginia Brick-Old Virginia
   Lynnhaven Wood Mold

3.Brick shall comply with ASTM C-67and ASTM C-216 latest edition . Grade SW, Type FBS or ASTM C-652 latest edition, Grade SW, Type HBS, Class H40V.

4. Brick Dimensions shall be 3-1/2" x 2-1/4" x 7-5/8" (W x H x L). Brick shall be running bond unless otherwise noted.

5. Provide selections made by Architect from manfacturer's full range of standard colors, textures, and patterns for brick of type indicated.

6. Brick cleaning shall conform to Techincal Bulletin 4: Section 4200, Brick Cleaning Recommendations and to BIA Technical Note #20-R. Contact Manufacturer for recommendations.

7. Mortar shall be type consiting by proportion of portland cement, hydrated lime and sand. Mortar joints shall be concave and struck with a smooth steel tool.

8. Grout shall conform to ASTM C-476 for fine grout mix. Slump shall be 10% and consist of 1 part portland cement and 3 parts sand.

9. Mortar Maunufacturer and Type:

   Argos-Magnolia Bluff

Thermal and Moisture Protection:

1. Caulking and sealants indicated on the drawings and specified to make joints water and air tight.

2. Caulking color is to be as selected from the manfacturer's standard colors for exposed joints.

3. Exterior elastometric sealant shall be polysulfied or polyurethane based complying with FS TT-S-00230. Provide one of the following:

   Vulkem 116 by Mameco
   Synthacalk GC-9 by Pecora
   Flexiseal: One-part by Dap

4. Caulking for interior joints shall be acrylic-latex sealantl; Dap one-part acrylic sealant or approved equal. Clean joint surfaces immediately before installation. Comply with manufacturer's printed instructions. Install backer rod of size and at depth recommended by manufacturer.

5. The following shall be caulked and sealed as indicated and specified:

All joints at perimeter of opening in interior and exterior walls, such as doors, windows, louvers, and pipes.Joints in wood construction to receive paint and all joints indicated in drawings.

6. Stackvent flashing shall be turned down into the vent stack; base flashing shall be not less than 18" square.

7. All sheet metal flashing shall be fabricated of 26 guage, aluminum unless otherwise indicated or specified.

8. Sheet metal flashing work includes roof penetrations, exterior column capitals, bollards and box beams.

Exterior Finish Systems Where Specified:

1. Scope of Work- Furnish all labor, materials, equipment, services and other apparatus to complete installation of exterior finish system. Exterior finish system shall consist of an reinforced base coat applied directly to c.m.u. wall and a smooth finish protective finish coat.

2. Designation PM for class of exterior finsih system specified in this section is based on the classification developed by the Exterior Insulation Manufacturers Association.

3. Manufacturer:
   Dryvit Systems, Inc.
   Insul/Crete Co., Inc.
   Simplex Div., Anthony Industries, Inc.

4. Materials

Compatibility: Provide base and finish coat materials, and accessories that are compatible with one another and approved for use by system manufacturer.

5. Color and texture of protective coating as selected by Architect.

6. Mechanical Fasteners: system manfacturer's standard corrosion-resistant fastener assemblies.

7. Trim Accessories: Weep bases, corner beads, casing beads and control joints. Material will be either solid zinc or PVC and per system manfacturer's requirements;

8. Expansion Joints: Continuous expansion joints shall be installed where the building system abuts other materials, where the substrated changes, where expansion joints occur in the substrate, or where building expansion joints occur. Continuous control joints shall be constructed of back to back casing bead with a minimum of 3/8" separation to receive backer rod and sealant, or may be constructed from a single component accessory. Isolation joints are required around all wall penetrations, including doors and windows.

Precast Concrete:

I. SCOPE

A. This specification covers all labor, materials and services incidental to and including the furnishing and setting of all Cast Stone as indicated on the drawings and specified herein.

B. The Manufacturer shall be responsible for all labor, materials, equipment and services necessary for and incidental to providing all Cast Stone covered by this specification.

C. The Setting Contractor shall unload, receipt for, store and set all Cast Stone covered by this specification and shall provide and install all anchors for same.

II. QUALIFICATION OF MANUFACTURER

A. The Manufacturer shall have a minimum of ten years continuous operation, having experience, adequate facilities and capacity to furnish the quality, sizes and quantity of Cast Stone required without delaying the progress of the work, and whose products have been previously used and exposed to the weather with satisfactory results.

III. DRAWINGS

A. Scale and/or full size detail drawings will be furnished where necessary by the Architect, and they shall be accurately followed in the execution of this work.

B. The Cast Stone Manufacturer shall prepare and submit for approval, complete properly marked setting drawings, showing details and sizes of stones; arrangement of joints; bonding; inserts; joints; connections to adjoining walls or materials; reinforcing; and method of installation and anchoring.

C. Unless otherwise specified, shop drawings shall provide the following:

1. Provide suitable wash on all exterior sills, coping, projecting courses and pieces with exposed top surfaces.

2. Window sills shall have raised fillets at the back.

3. All projecting pieces and soffit stones shall have drips under the outer edge.

4. The shop drawings shall show the setting mark of each stone and its location on the structure. The stone when delivered shall bear the same corresponding setting mark on an unexposed surface.

D. The Manufacturer shall submit the shop drawings to the General Contractor. The General Contractor shall verify all dimensions and coordinate the drawings with field conditions. The General Contractor shall submit shop drawings to the Architect for approval.

E. The shop and setting drawings shall be approved by the Architect and General Contractor before the Manufacturer shall be required to proceed with the work.

IV. MODELS AND MOULDS

A. Should models of ornaments be required, all models shall be prepared by skilled craftsmen in a correct and artistic manner in strict accordance with the spirit and intent of the approved drawings. Models shall be approved by the Architect before any work is executed therefrom.

V. MATERIALS

A. Cement - Portland Type I or Type III white and/or gray meeting ASTM C 150.

B. Fine aggregate - carefully graded and washed natural sands, or manufactured granite, quartz or limestone sands meeting ASTM C 33 except that gradation may vary to achieve desired finish and texture.

C. Coarse aggregate - carefully graded and washed natural gravel, or crushed, graded stone such as granite, quartz, limestone or other durable stone meeting ASTM C 33 except that gradation may vary to achieve desired finish and texture.

D. Color - All colors added shall be inorganic (natural or synthetic) iron oxide pigments meeting ASTM C 979 excluding the use of a cement grade of carbon black pigment, and shall be guaranteed by the pigment manufacturer to be lime-proof. The amount of pigment shall not exceed 10% by weight of the cement used.

E. Admixtures - ASTM C 494

F. Water - Shall be potable tap water free from impurities.

G. Air Entrainment - Wet cast mixtures shall maintain 5% to 7% air entrainment where surfaces are exposed to freeze-thaw. Admixture shall meet ASTM C 260.

.

V. MATERIALS

A. Cement - Portland Type I or Type III white and/or gray meeting ASTM C 150.

B. Fine aggregate - carefully graded and washed natural sands, or manufactured granite, quartz or limestone sands meeting ASTM C 33 except that gradation may vary to achieve desired finish and texture.

C. Coarse aggregate - carefully graded and washed natural gravel, or crushed, graded stone such as granite, quartz, limestone or other durable stone meeting ASTM C 33 except that gradation may vary to achieve desired finish and texture.

D. Color - All colors added shall be inorganic (natural or synthetic) iron oxide pigments meeting ASTM C 979 excluding the use of a cement grade of carbon black pigment, and shall be guaranteed by the pigment manufacturer to be lime-proof. The amount of pigment shall not exceed 10% by weight of the cement used.

E. Admixtures - ASTM C 494

F. Water - Shall be potable tap water free from impurities.

G. Air Entrainment - Wet cast mixtures shall maintain 5% to 7% air entrainment where surfaces are exposed to freeze-thaw. Admixture shall meet ASTM C 260.

VI. PROPERTIES OF MIX DESIGN

A. The manufacturer shall be responsible to design a mix which achieves both the strength and the surface finish desired.

B. Compressive strength shall be not less than 6500 psi at 28 days when tested in accordance with the requirements of this specification.

C. The average water absorption of Cast Stone shall not exceed 6% by dry weight when tested in accordance with the requirements of this specification.

VII. REINFORCEMENT

A. Cast Stone shall be reinforced with new billet steel reinforcing bars meeting ASTM A 615, grade 40 or grade 60, when necessary for safe handling, setting and structural stress, and the size of the reinforcing shall be specified. If the surfaces are to be exposed to the weather, the reinforcement shall be galvanized or epoxy coated when covered with less than 2 inches of material for bars larger than 5/8 inch and 1 1/2 inches for bars 5/8 inch or smaller. The material covering in all cases shall be at least twice the diameter of the bars.

B. Cast Stone panels shall be reinforced as may be required for handling and to allow for temperature changes and structural stress. There shall be a minimum steel reinforcement amounting to 1/4 percent of the sectional area of the panel and should the panel be greater than 12 inches in any sectional dimension, the temperature steel shall be placed in both directions.

C. Where applicable, cold-drawn steel wire reinforcement meeting ASTM A 82, Welded Wire Fabric reinforcement meeting ASTM A 185 or ASTM A 497 or steel bar or rod mat reinforcement meeting ASTM A 184 may be used.

VIII. COLOR AND FINISH

A. The manufacturer shall submit to the Architect, for selection approval, samples of the Cast Stone specified which will be typical of the general range of color and finish to be furnished.

B. Exposed surface, unless otherwise specified, shall exhibit a typically fine grained texture similar to natural stone with no bugholes permitted.

D. Color and texture of Cast Stone shall be generally equal to the approved sample when viewed in direct daylight at a 10 foot distance.

E. The range of total acceptable color (lightness, color saturation and hue) variations shall not exceed CIELAB 3.0 provided that the difference in hue alone does not exceed CIELAB 1.0 as defined by the International Commission of Illumination, 1976 Standards.

IX. TOLERANCES

A. Stone dimensions - The numerically greater of plus or minus 1/8 inch or length/360.

B. Setting tolerances - plus or minus 1/8 inch allowable out of plane from adjacent unit.

.

X. TESTING

A. Testing shall be performed in accordance with ASTM C 31, ASTM C 39 and ASTM C 642 except that 2 inch cube specimens shall be used, oven-dried in accordance with ASTM C 97.

B. Test results shall be determined by the average of three specimens per test.

C. The results of compression tests shall be divided by a factor of 0.8 when saw-cut or core-drilled specimens are used.

XI. DELIVERY AND STORAGE

A. All Cast Stone shall be carefully loaded and packed for transportation, exercising customary and reasonable precaution against damage while in transit.

B. All Cast Stone shall be received and unloaded at the project site by competent workmen with the necessary care and handling to avoid damage and soiling.

C. The Cast Stone material shall be stored clear of the ground on non-staining planking or pallets in such a manner as to be protected from damage while in storage. Should Cast Stone be stored for an extended period, cover with polyethylene or other non-staining waterproof material.

XII. SETTING

A. All Cast Stone shall be set by experienced masons, accurately and in accordance with the shop and setting drawings. Unless otherwise noted, every stone shall be set in a full bed of mortar with all vertical joints flushed full. All anchors and dowels shall be firmly placed and all anchor holes and dowel holes and similar holes filled completely with mortar or non-shrink grout.

B. All anchors, dowels and other anchoring devices shall be furnished by the setting contractor as shown on approved shop drawings, using whenever possible, standard building stone anchors, commercially available in a non-corrosive material such as galvanized steel, brass, or stainless steel - Type 302 or 304.

C. When setting with mortar, all stones not thoroughly wet shall be drenched with clear water just prior to setting.

D. After each stone has been set, all joints shall be raked to a depth of 3/4 inch from the face for pointing. The face of each stone shall then be sponged off to remove any splashed mortar or mortar smears.

E. Only the ends of lugged sills and similar stones shall be embedded in mortar. The balance of joint to be left open until pointing of stone work, then tuck points on face only to a depth of 3/4 inch.

F. All cornices, copings, projecting belt courses, steps, platforms and in general, all stone areas either partially or totally horizontal, shall be set with unfilled vertical joints. After setting, insert properly sized balk-up material or backer rod to proper depth, prime the ends of the stone, gun in sealant.

G. All stone shall be protected from splashing mortar or damage by other trades. Any foreign matter splashed on the stone should be removed immediately.

XIII. PATCHING AND CLEANING

A. The repair of chipped or damaged Cast Stone shall be done only be mechanics skilled in this class of work with materials furnished by the Manufacturer and according to this direction.

B. Before pointing, the face of all Cast Stone shall be scrubbed with a fibre brush, using soap powder and water and shall then be thoroughly rinsed with clean, running water. Any mortar on the face of the Cast Stone shall be removed. No acids or prepared cleaners shall be used without the approval of the Cast Stone Manufacturer.

XIV. POINTING AND CALUKING

A. When ready for pointing, the joints shall be dampened and carefully pointed to a slight concave unless otherwise specified by the Architect. No pointing shall be done in freezing weather nor in locations exposed to hot sun, unless properly protected. Pointing mortar shall be composed of 1 part non-staining cement (ASTM C 91), 1 part hydrate lime (ASTM C 207-Type S) and 4 parts of clean, washed sand (ASTM C 144). Coloring pigments may be added as required. The Architect shall approve color pointing mortar before proceeding with pointing.

B. Head joints in coping and similar stones shall be caulked with a joint sealant used in accordance with the manufacturer's instructions.

Anodized Aluminum Grid & Lettering:

1. Scope of Work- furnish all materials, labor, equipment and services for all decorative gable and entrance anodized aluminum.

2. Measurements- All sizes shall be taken from the actual framing on site. All decorative anodized aluminum shall be set in place and this contractor shall assume all responsibility in regard to correct sizes. Sizes marked on drawings are approximate and shall be used for estimate only.

3. Quality Assurance-Installer qualifications shall be a minimum of 2 years experience with installation of similar products. Provide a mock-up sample for evaluation of finish, color, installation techniques and workmanship as designated by the Architect. Do not proceed with remaining work until workmanship, color, and sheen are approved by the Architect. Complete installation as required to produce acceptable work.

4. Designation PM shall be based on processes, tests and quality control systems as specified from the Aluminum Associates (AA), the Aluminum Anodizers Council (AAC), and the individual anodizing companies or other trade organizations.

5. Finish: All exposed surfaces should receive an architectural anodized finish in conformance with Aluminum Association Standard SSA-46 or AAMA 611 standard. Processing should be sulfuric acid or equivalent anodizing with electrolytic or immersion depostied inorganic pigmentation in the coating. The resulting anodized finish should be continuous, fully sealed and free of powdery surfaces, smut and blemishes.

6. Alloys: All aluminum should be Aluminum Association alloys as recommended by manufacturers for the use intended and required to produce the specific finish. The AAC Color standards detail the specific testing procedure for anodic coating thickness, coating desity and seal integrity. These properties can be checked by the appropriate ASTM B244, ASTM B137, ASTM B680, ISO 2360, or ISO 3210.

7. Anodization Quality Control: The anodizer is responsible for the quality control, including inspection and records of inspection, which are available to the owner and/or architect upon request.

8. Shop Drawings- furnish shop drawings of decorative anodized alumnum for review and approval prior to construction of aluminum materials. Shop drawings should be in accordance with item 15 of General Notes for these specifications.

Ornamental Steel :

PART 1 - GENERAL
1.01 WORK INCLUDED
The contractor shall provide all labor, materials and appurtenances necessary for installation of the welded ornamental steel system defined herein at the Stockbridge Monument.

1.02 RELATED WORK
Ornamental steel

1.03 SYSTEM DESCRIPTION
The manufacturer shall supply a total system of ***Welded and Rackable*** (ATF – All Terrain Flexibility) Ornamental Steel design. The system shall include all components (i.e., ornamental panels and hardware) required.

1.04 QUALITY ASSURANCE
The contractor shall provide laborers and supervisors who are thoroughly familiar with the type of construction involved and materials and techniques specified.

1.05 REFERENCES
- ASTM A653/A653M - Standard Specification for Steel Sheet, Zinc-Coated (Galvanized) or Zinc-Iron Alloy Coated (Galvannealed) by the Hot-Dip Process.
- ASTM B117 - Practice for Operating Salt Spray (Fog) Apparatus.
- ASTM D523 - Test Method for Specular Gloss
- ASTM D714 - Test Method for Evaluating Degree of Blistering in Paint.
- ASTM D822 - Practice for Conducting Tests on Paint and Related Coatings and Materials using Filtered Open-Flame Carbon-Arc Light and Water Exposure Apparatus.
- ASTM D1654 - Test Method for Evaluation of Painted or Coated Specimens Subjected to Corrosive Environments.
- ASTM D2244 - Test Method for Calculation of Color Differences from Instrumentally Measured Color Coordinates.
- ASTM D2794 - Test Method for Resistance of Organic Coatings to the Effects of Rapid Deformation (Impact).
- ASTM D3359 - Test Method for Measuring Adhesion by Tape Test.
- ASTM F2408 – Ornamental Fences Employing Galvanized Steel Tubular Pickets.

1.06 SUBMITTAL
The manufacturer's literature shall be submitted prior to installation.

1.07 PRODUCT HANDLING AND STORAGE
Upon receipt at the job site, all materials shall be checked to ensure that no damage occurred during shipping or handling. Materials shall be stored in such a manner to ensure proper ventilation and drainage, and to protect against damage, weather, vandalism and theft.

PART 2 - MATERIALS
2.01 MANUFACTURER
The ornamental steel shall conform to ***Welded and Rackable*** (ATF – All Terrain Flexibility) Ornamental Steel, design, style manufactured by B&P Iron or equal.

AIKIN DESIGN ARCHITECTS, LLC
Architecture-Planning
Construction Administration

Offices: Fayetteville and Decatur, Georgia
Office Phone: 770-461-6980
E-mail: aikindesignarch@att.net

Copyright 2013 by AIKIN DESIGN ARCHITECTS, LLC

AIKIN DESIGN ARCHITECTS, LLC assumes no liability for any building constructed from these plans and the owner/contractor must verify all dimensions and construction techniques indicated here prior to proceeding with construction.

The plans, elevations, drawings, illustrations, and other material contained within this set are the exclusive property of AIKIN DESIGN ARCHITECTS, LLC. All rights reserved.

STOCKBRIDGE MONUMENT

Stockbridge, Georgia

RELEASED FOR BID	11-6-13

DRAWN BY:

PROJECT:

PLAN NO.

A-4

ELECTRICAL GENERAL NOTES

SERVICE AND DISTRIBUTION

Provide a complete electrical system. The main switchboard Feeders, Transformers, Panelboards, Busway, remote control switches, Contactors etc. to provide a complete system.

All Distribution switchgear, Branch circuit breaker panels, Switchboard distribution panelboards, Transformers, Busway, etc. shall be the unit responsibility of one manufacturer,

Shop drawings for equipment specified in this section shall show that all specified requirements have been incorporated.

Short circuit rating shall be as indicated on single line diagram.

All floor mounted distribution equipment shall be mounted on a 4" concrete house keeping pad.

GROUND FAULT EQUIPMENT

An adjustable Ground fault protection system shall be provided as an intergal part of the main fused switch in each building main switchboard

The ground fault relay shall be solid state construction, except that a coil operated output may be provided to control 1230 volt power to operate a fusible bolted pressure contact switch. The relay shall have an adjustaable sensitivity for ground fault pick-up currents.

Provide a monitor panel on the switchboard, including a push-to-test button for the test circuit and a red ground fault indicator light to indicate the circuit interupter has opened due to a ground fault condition. The unit dhsll operate on a 120 volt source.

ELECTRICAL SERVICE (from pad mounted transformers)

Make all arrangements with the Power Co. and pay all charges made by the Power Co. for permanent elecctrical power.

The Power Co. will provide the underground primary service and the pad mount transformer.

The secondary service voltage to the building shall be 120/208 volt, single phase, 60 hertz A.C., provide all conduit and wire from the secondary terminals of the transformer to the main switchboard.

METERING

Metering equipment will be furnished by the Power Co. The Power Co. will furnish the meter cabinet for installation at a point as directed by the Power Co.

Provide 1" rigid conduit from the transformer to the meter as directed by the Power Co. The Power Co. will provide the control wires to the meter.

BRANCH CIRCUIT PANELBOARDS

Panelboards (Panels) shall be general purpose enclosures and shall be sufficient size to provide a minimum gutter of 4" on all sides, boxes shall be a minimum 20" width and 5 3/4" depth.

Hinged door covering all device handles shall be included in all panel trim. Doors shall have flush-type cylinder lock and catch, except that doors over 48" in height shall have auxiliary fasteners at top and bottom of door in addition to flush type cylinder lock and catch. door hinges shall be concealed. All locks shall be keyed alike. directory frame aand card having a transparent cover shall be furnished each panel door.

Phase bussing shall be full length without reduction. Cross and center connections shall be of the same material as the bus.

The Neutraal bus shall utilize set screws to bond the neutral wires to the neutral bus through holes idrilled in the neutral bar. A sheet copper neutral bus utilizing flathead screws to hold the neutral wires will not be acceptacle.

All circuit breakers shall be manually operated. Thermal-magnetic automatic, of ampaacity and poles as indicated. They shall be quick-make quick-break, both on manual and automatic operations. Breakers shall be over-the-center-toggle type, with the handle going to a position between "ON" and "OFF" to indicate automatic tripping. All Multi-pole breakers shall have internal common trip.

Short circuit rating shall be as indicated on single line and schedules.

Panels shall be manufactured by General Electric, Square D or Cutler Hammer.

TRANSFORMERS

Branch circuit and distribution transformers shall be the dry type, and shall have the rating indicated.

Single phase transformers shall be 480 volt primary and 120/208 volt secondary, Three phase transformers shall be 480 volt primary and 120/208 volt grounded type secondary. Transformers 25 KVA and laarger shall have a minimum of 3 1/2% full capacity primary taps.

Transformers shall have a U.L. recognized 220 degree insulaation system and shall be designed so that under full load, the average conductor temperature rise does not exceed 115 degree C. rise above a 40 degrreC. ambient aaand the enclosure does not exceed 50 degree C. rise at any point.

Transformers shall be Energy Efficient TP-1 compliant.

Transformers that are of the floor mounted type shall be mounted on Korfund Vibration Eliminators of the pad type.

Transformers shall be of the same manufacturer as switchboard.

FUSIBLE SWITCHES

The switches shall be Nema 1 or Nema 3R as required and shall have provisions with clear indications that the device is in "ON" or "OFF". The switches shall be quick-make, quick-break mechanisms with defeatable door interlock to prevent door from being opened when the operating handle is in the "ON" position.

Switches of 30 to 600 amperes shall have plug-on line side connectors. Switches 30 to 100 amperes shall have built in fuse pullers. Switches shall have a 200,000 ampere short circuit rating.

CONDUIT

Conduit below slab and underground shall be (PVC) with rigid galvernized elbows. Plastis (PVC) shall be schedule 40 heavy duty type. A grounding conductor shall be provided.

Electrical metalic tubing (EMT) shall be steel, Galvanized both inside and out

Conduits above floor level to a point 10'-0" above floor level shall be Rigid galvanized both inside and out with threaded joint.

Flexible metal conduit shall be flexible steel conduit tubing and shall meet Underwriters Laboratories Standards for flexible steel conduit.

Liquid tite conduit shall be flexible, liquid tite and sun resistant

CONDUIT FITTINGS

Rigid conduit fittings shall be zinc-coated, ferrous metal and taper thread type.

EMT fittings shall be zinc-coated steel and set screw type
EMT connectors shall have inssulated throughts.

Conduit connectors to switchboards, motor control centers, transformers panel cabinets, and pull boxes shall have grounding wedge lugs that between the bushing and the box or locknuts designed to bite into metals.

CONDUCTORS

Conductors shall be copper 98% conductivity, 600 volt insulation, sizes specified are AWG gauge for No. 4/0 and smaller and circular mils (MCM) for all larger than No. 4/0 Conductor No. 10 and smaller shall be solid and type "THHN" or "THWN" insulation. No. 8 and larger shall be stranded and type "THW" or "XHHW" insulation.

Conductors for lighting and receptacle circuits shall have colored jackets Wiring shall be color coded with the same color used with its respective phase through the entire job as follows.

208/120 volt systems

Phase A	Black
Phase B	Red
Phase C	Blue
Neutral	White
Ground	Green

480/277 volt system

Phase A	Brown
Phase B	Orange
Phase C	Yellow
Neutral	Gray
Ground	Green

Feeder and service entrance conductors shall be color coded by use of plastic tape applied within 6" on each conductor end.

CONNECTION TO EQUIPMENT

Equipment furnished by the owner or other sections such as mechanical equipment, signs, kitchen equipment etc. will be installed by others. Provide electrical service and make the electrical circuit connection to the equipment.

LIGHTING FIXTURES

Each lightingn fixture shall be as specified for each lighting fixture in the lighting fixture schedule.

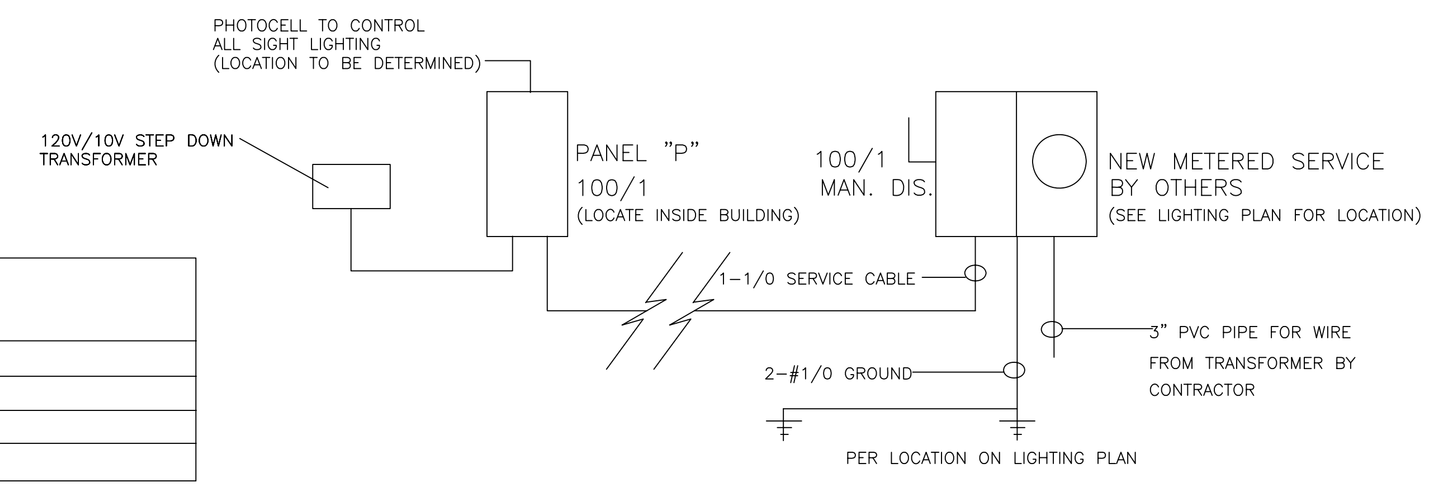

NOTE:

1) METAL WATER PIPE, BUILDING STEEL, CONCRETE ENCASED ELECTRODE (REINFORCING RODS IN FOUNDATION) AND GROUND RING SHALL BE BONDED TOGETHER TO FORM THE GROUNDING ELECTRODE SYSTEM.

2) 3/4" MIN. RND. ELECTRICAL CONDUIT-CONTRACTOR TO SIZE CONDUIT

LIGHTING FIXTURE SCHEDULE

FIXTURE	DESCRIPTION	MANUFACTURER	CAT #	LAMPS	NOTES
A	RECESSED	PROGRESS	#P6625-30/P26	1-26 QUAD LAMP, HPF	DAMP LOCATION LABEL
B	WALLMOUNT BULLET	LUMIERE	WESTWOOD #716-2	100 WATT	
C	WALLMOUNT DECORATIVE	KICHLER	TREMILLO #49203BKFL	18 WATT	

PANEL "P" LOCATION : INSIDE SECOND LEVEL
VOLTAGE 120/208
AMP RATING 100A/SINGLE PHASE MAIN: MB

CKT NO.	BREAKER	DESCRIPTION	VA	PHASE	VA	DESCRIPTION	BREAKER	CKT NO.
1	20/1	RECESSED LIGHTS	800	A	900	LANDSCAPE LIGHTS	20/1	2
3	20/1	BULLET LIGHTS	1600	A	900	LANDSCAPE UP LIGHTS	20/1	4
5	20/1	TOWER LIGHTS	800	A	-	SPARE	-	6
7	20/1	DECORATIVE LIGHTS	1600	A	-	SPARE	-	8
9	-	SPARE	-	A	-	SPARE	-	10
11	-	SPARE	-	A	-	SPARE	-	12
13	-	SPARE	-	A	-	SPARE	-	14
15	-	SPARE	-	A	-	SPARE	-	16
17	-	SPARE	-	A	-	SPARE	-	18
19	-	SPARE	-	A	-	SPARE	-	20
21	-	SPARE	-	A	-	SPARE	-	22
23	-	SPARE	-	A	-	SPARE	-	24
25	-	SPARE	-	A	-	SPARE	-	26
27	-	SPARE	-	A	-	SPARE	-	28
29	-	SPARE	-	A	-	SPARE	-	30
			4800		1800			

TOTAL SERVICE LOAD=6600 VA DIVIDED BY 208 V =32A
TOTAL CALCULATED SERVICE LOAD =32A

4 / E-1 ELECTRICAL PANEL SCHEDULE
SCALE: N.T.S.

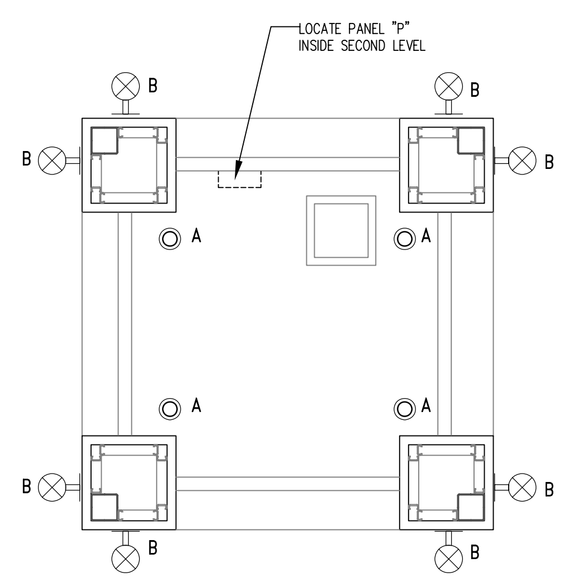

2 / E-1 UPPER LEVEL LIGHTING PLAN
SCALE: 1/4"=1'-0"

3 / E-1 ELECTRICAL SERVICE DIAGRAM
SCALE: N.T.S.

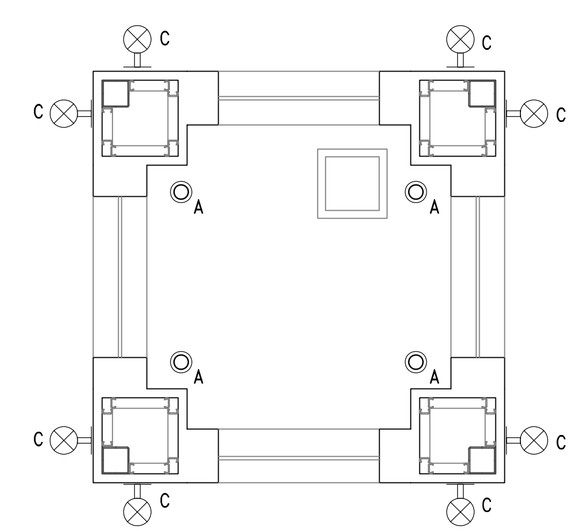

1 / E-1 GROUND LEVEL LIGHTING PLAN
SCALE: 1/4"=1'-0"

AIKIN DESIGN ARCHITECTS, LLC
Architecture-Planning
Construction Administration
Offices: Fayetteville and Decatur, Georgia
Office Phone: 770-461-6980
E-mail: aikindesignarch@att.net

Copyright 2013 by AIKIN DESIGN ARCHITECTS, LLC

AIKIN DESIGN ARCHITECTS, LLC assumes no liability for any building constructed from these plans and the owner/contractor must verify all dimensions and construction techniques indicated here prior to proceeding with construction.

The plans, elevations, drawings, illustrations, and other material contained within this set are the exclusive property of AIKIN DESIGN ARCHITECTS, LLC. All rights reserved.

STOCKBRIDGE MONUMENT
Stockbridge, Georgia

RELEASED FOR BID	11-6-13

DRAWN BY:

PROJECT:

PLAN NO.

E-1

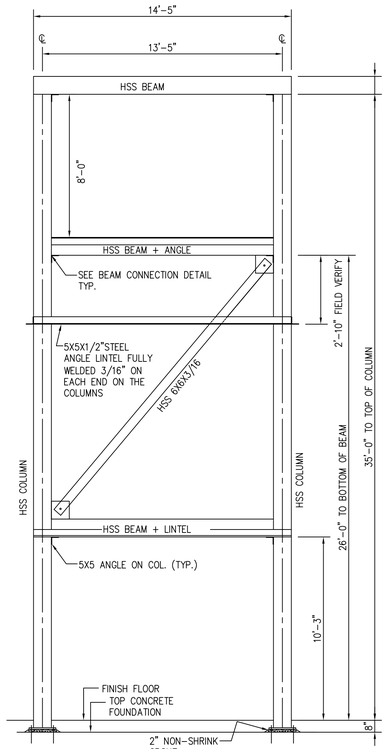

ELEVATION FRAMING
1 S1 TYP. 4 SIDES TOWER
SCALE: 1/4" = 1'-0"

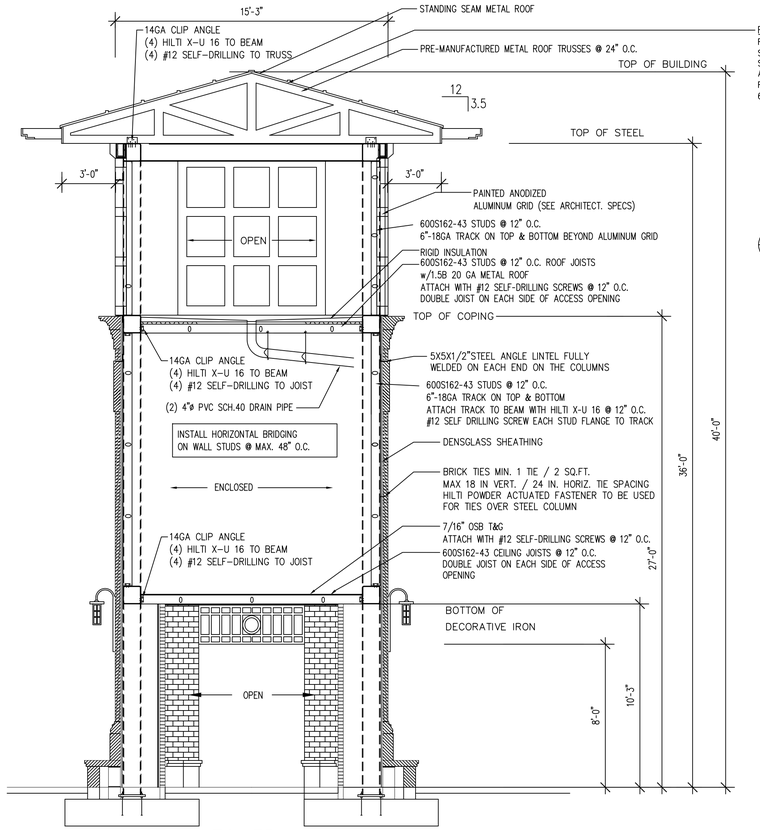

X-SECTION TOWER
SCALE: 1/4" = 1'-0"

ROOF SHEATHING
ROOF SHEATHING SHALL BE 15/32 INCH EXPOSURE 1 WOOD STRUCTURAL PANELS OR 7/16" OSB 24/16 EXPOSURE 1 RATED SHEATHING. LONG DIMENSION SHALL BE PERPENDICULAR TO FRAMING AND END JOINTS SHALL BE STAGGERED. SHEATHING SHALL BE FASTENED WITH #12 SELF-DRILLING SCREWS AT 6" O.C. AT EDGES AND 6" O.C. AT INTERMEDIATE FRAMING.

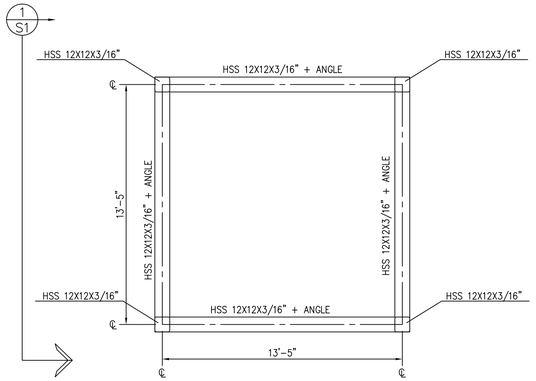

1ST LEVEL FRAMING PLAN
TOP OF BEAMS 11'-3" A.F.F.
SCALE: 1/4" = 1'-0"

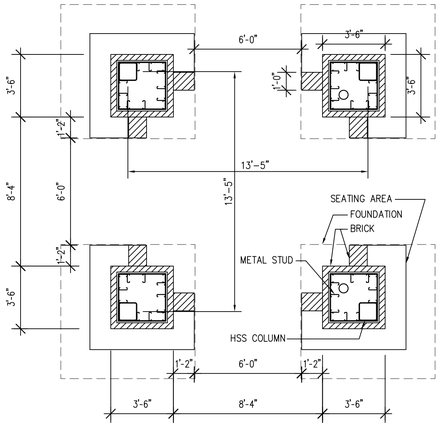

PLAN VIEW TOWER BASE
SCALE: 1/4" = 1'-0"

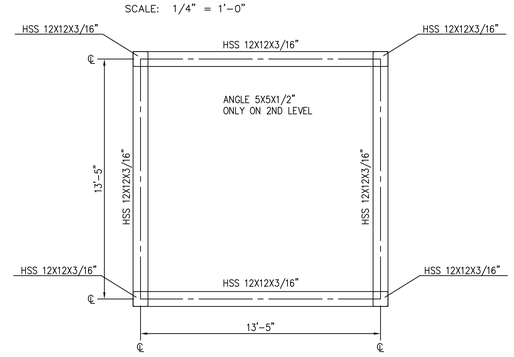

2ND & 3RD LEVEL FRAMING PLAN
SCALE: 1/4" = 1'-0"

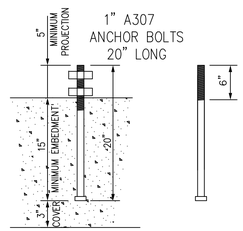

ANCHOR BOLT DETAILS
N.T.S.

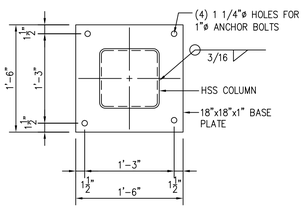

BASE PLATE DETAIL (TYP.)
SCALE: 1" = 1'-0"

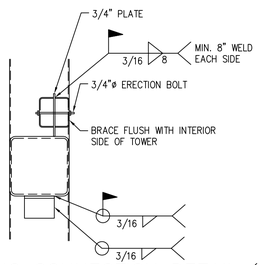

BRACING CONNECTION DETAIL (TYP.)
SCALE: 1" = 1'-0"

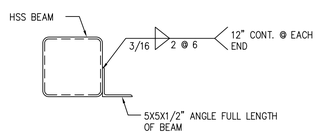

LINTEL CONNECTION DETAIL (TYP.)
SCALE: 1" = 1'-0"

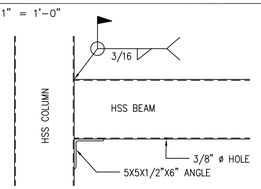

BEAM CONNECTION DETAIL (TYP.)
SCALE: 1" = 1'-0"

GENERAL STEEL NOTES

1. DESIGN, FABRICATION, AND ERECTION SHALL BE IN ACCORDANCE WITH AISC MANUAL OF STEEL CONSTRUCTION ASD 14TH EDITION UNLESS OTHERWISE MODIFIED ON THE DESIGN DRAWINGS OR IN THE SPECIFICATIONS.

2. MATERIAL SHALL CONFORM TO THE FOLLOWING SPECIFICATIONS UNLESS OTHERWISE NOTED.
   STRUCTURAL STEEL PLATES SHALL BE A-36 STEEL
   HOLLOW STRUCTURAL SECTIONS SHALL BE A500 GRADE B OR C
   WELDING ELECTRODES SHALL BE AWS D1.1 E70XX
   BOLTS SHALL BE ASTM A325 HIGH STRENGTH BOLTS
   3/4" DIAMETER UNLESS OTHERWISE NOTED

3. ALL SHOP CONNECTIONS SHALL BE WELDED OR MADE WITH HIGH STRENGTH BOLTS.

4. ALL WELDING SHALL BE DONE BY CERTIFIED WELDERS IN ACCORDANCE WITH AWS D1.1.

5. GUSSET PLATES SHALL BE 3/8" THICK MINIMUM UNLESS OTHERWISE NOTED. ALL CORNERS SHALL BE NEATLY CLIPPED IF THEY PROTRUDE.

6. ALL VERTICAL BRACING AND KNEE BRACING SHALL BE ON COLUMN CENTERLINES UNLESS OTHERWISE NOTED.

7. ALL SHOP DRAWINGS SHALL BE REVIEWED BY THE DESIGN ENGINEER. THIS REVIEW IS FOR DESIGN CONTENT ONLY AND DOES NOT REMOVE RESPONSIBILITY FOR THE FABRICATOR OR THE ERECTOR TO PROVIDE MATERIAL IN ACCORDANCE WITH THESE PLANS.

8. THE ERECTOR SHALL PROVIDE ALL TEMPORARY SUPPORTS AND BRACING AS REQUIRED FOR STABILITY OF THE STRUCTURE UNTIL THE STRUCTURE IS COMPLETE.

9. ALL STEEL SHALL BE CLEANED IN ACCORDANCE WITH SSPC-SP2 AND SHALL BE SHOP PRIME PAINTED MEETING OR EXCEEDING THE REQUIREMENTS OF FEDERAL SPECIFICATION TT-P-636D, TT-P-664C AND SSPC PAINT-25.

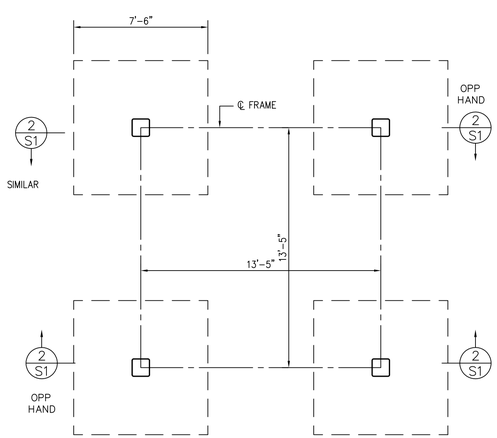

FOUNDATION PLAN TOWER
SCALE: 1/4" = 1'-0"

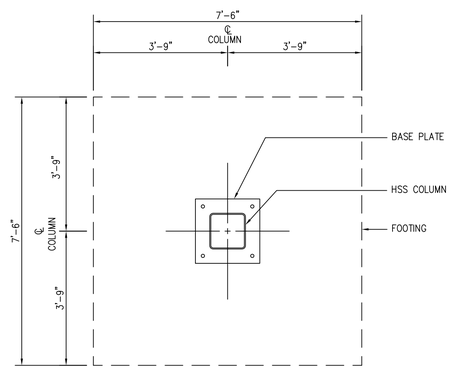

2 S1 PLAN SECTION
1/2" = 1'-0"

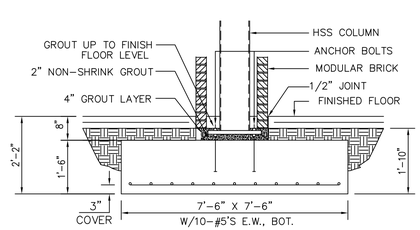

2 S1 COLUMN FOOTING
1/2" = 1'-0"

GENERAL FOUNDATION NOTES:

1) FOOTINGS ARE DESIGNED WITH AN ASSUMED SOIL BEARING OF 2000 PSF TO BE VERIFIED BY CONTRACTOR. ALL CONCRETE DESIGN IS BASED ON ACI 318

2) WHERE FOOTINGS OR SLAB ON GRADE IS TO BE PLACED ON FILL, THE TOPSOIL MUST BE REMOVED AND REPLACED WITH SELECTED FILL COMPACTED TO 95% OF ITS MAXIMUM DENSITY USING THE STANDARD PROCTOR TEST.

3) EXTERIOR CONCRETE SHALL BE AIR-ENTRAINED 5%. ALL CONCRETE SHALL HAVE A MINIMUM 28 DAY COMPRESSIVE STRENGTH OF 3000 PSI. UNLESS NOTED OTHERWISE.

4) REINFORCING STEEL SHALL BE COLD BENT GRADE 60 CONFORMING TO ASTM A 615. LAP SPLICES SHALL BE A MINIMUM OF 30" UNLESS OTHERWISE NOTED.

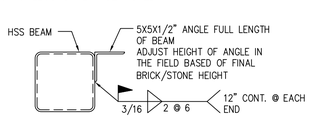

2ND LEVEL ANGLE CONNECTION (TYP.)
SCALE: 1" = 1'-0"

VEST
ENGINEERING INC.
410 WYNFIELD DR.
TYRONE, GA 30290
404-218-9579
FAX 770-217-1209
WWW.VESTENGINEERING.COM

GEORGIA REGISTERED No. PE026479 PROFESSIONAL ENGINEER 10-8-13 STEPHAN TREMBLAY

THIS DRAWING IS AN INSTRUMENT OF THE ENGINEER'S SERVICE FOR USE SOLELY WITH RESPECT TO THE PROJECT SHOWN AND MAY NOT BE DUPLICATED OR USED WITHOUT THE CONSENT OF THE ENGINEER.

ISSUES & REVISIONS

REV1:10-18-13
ENG. MODIFICATIONS

PROJECT:
TOWER MONUMENT
STOCKBRIDGE, GA 30281

CONTENTS:
FRAMING & DETAILS

DATE: 10-17-13
PROJ. NO. .

SHEET NO:
S-1
OF SHEETS