CIVIL DESIGN DRAWINGS
FOR
MAYS ROAD CULVERT IMPROVEMENTS

LAND LOT 226, 7TH DISTRICT
HENRY COUNTY, GEORGIA

OWNER:	24 HOUR CONTACT	TOPOGRAPHIC SURVEY BY:	ENGINEER:
CITY OF STOCKBRIDGE 4640 NORTH BOULEVARD STOCKBRIDGE, GA 30281 (770) 389-7900	CITY MANAGER MICHAEL HARRIS (770) 389-7900	FALCON DESIGN CONSULTANTS 235 CORPORATE CENTER DRIVE SUITE 200 STOCKBRIDGE, GA 30281 (770) 389-8666	FALCON DESIGN CONSULTANTS 235 CORPORATE CENTER DRIVE SUITE 200 STOCKBRIDGE, GA 30281 (770) 389-8666

VICINITY MAP
N.T.S.

SHEET INDEX

1.0	COVER SHEET
2.0	GENERAL NOTES
2.1	EROSION CONTROL NOTES
3.0	SITE, GRADING, & EROSION CONTROL PLAN
4.0-4.1	EROSION CONTROL DETAILS
5.0	CONSTRUCTION DETAILS

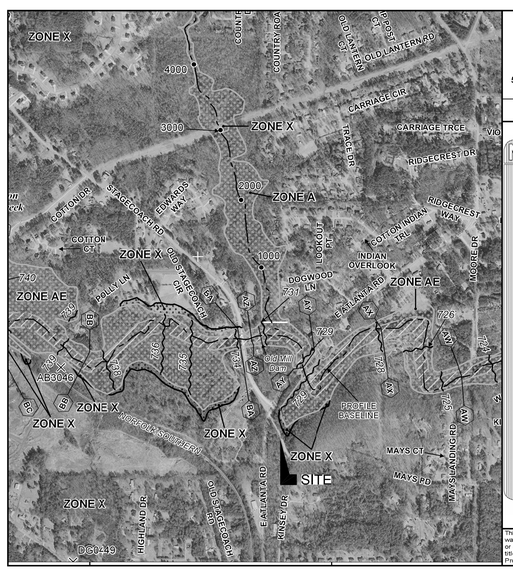

MAP SCALE 1" = 1000'
500 0 1000 2000 FEET

NFIP NATIONAL FLOOD INSURANCE PROGRAM

PANEL 0080C

FIRM
FLOOD INSURANCE RATE MAP
HENRY COUNTY, GEORGIA
AND INCORPORATED AREAS

PANEL 80 OF 305

(SEE MAP INDEX FOR FIRM PANEL LAYOUT)

CONTAINS:

COMMUNITY	NUMBER	PANEL	SUFFIX
HENRY COUNTY	130468	0080	C

Notice to User: The **Map Number** shown below should be used when placing map orders; the **Community Number** shown above should be used on insurance applications for the subject community.

MAP NUMBER
13151C0080C

EFFECTIVE DATE
MAY 16, 2006

Federal Emergency Management Agency

This is an official copy of a portion of the above referenced flood map. It was extracted using F-MIT On-Line. This map does not reflect changes or amendments which may have been made subsequent to the date on the title block. For the latest product information about National Flood Insurance Program flood maps check the FEMA Flood Map Store at www.msc.fema.gov

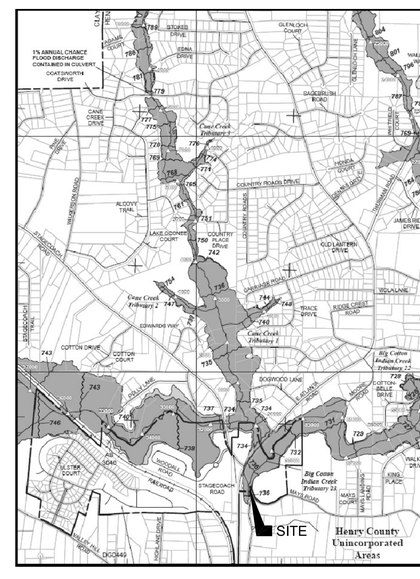

MAP SCALE 1" = 1000'
500 0 500 1,000 1,500 2,000 FEET
300 0 300 600 METERS

PRESENT AND FUTURE CONDITIONS MAPS

HENRY COUNTY, GEORGIA
AND INCORPORATED AREAS

PANEL 80 OF 305

CONTAINS:

COMMUNITY
HENRY COUNTY
STOCKBRIDGE, CITY OF

ISSUED MAY 2010
PROJECT NUMBER 15252268

Henry County Board of Commissioners
Building and Development Services

FALCON DESIGN CONSULTANTS
LAND PLANNING
CIVIL ENGINEERING
COA NO. PEF 004796
SURVEYING
COA NO. LSF 000797
235 CORPORATE CENTER DRIVE, SUITE 200
STOCKBRIDGE, GEORGIA 30281
(770) 389-8666 / FAX (770) 389-8666
CONSTRUCTION MANAGEMENT
VISIT US ON OUR WEBSITE
www.falcondesign.com

COVER SHEET
FOR
MAYS ROAD CULVERT IMPROVEMENTS
LOCATED IN:
HENRY COUNTY, GEORGIA
LAND LOT 100, 12TH DISTRICT

REVISIONS
1.
2.
3.
4.

811 Know what's below. Call before you dig.
UTILITIES PROTECTION CENTER
CONNECT TO 811 IN GEORGIA
OR DIAL 811

DATE:	9-14-16
SCALE:	N/A
FILE NUMBER:	ENG00
DRAWN BY:	AP

GEORGIA REGISTERED No. 030440 PROFESSIONAL ENGINEER
9-14-16

GSWCC# 0000009371

THIS DOCUMENT IS NOT VALID UNLESS IT BEARS THE ORIGINAL SIGNATURE OF THE REGISTRANT ACROSS THE REGISTRANT'S SEAL.

SHEET NUMBER
1.0

FALCON DESIGN CONSULTANTS, LLC. ALL RIGHTS ARE RESERVED. ANY POSSESSION, REPRODUCTION OR OTHER USE OF THIS DOCUMENT WITHOUT PRIOR WRITTEN PERMISSION FROM FALCON DESIGN CONSULTANTS, LLC. IS EXPRESSLY PROHIBITED.

P:\Projects\013.005 Mayes Rd. Culvert Improvements\Engineering\Mayes Rd ENG00.dwg, CVR, sustarslc, Sep 14, 2016 - 2:48:06pm

GENERAL NOTES:

GENERAL NOTES:

1. CAUTION, UNDERGROUND SERVICE ALERT! THE CONTRACTOR SHALL TELEPHONE TOLL FREE 1-800-282-7411 OR 811 A MINIMUM OF 48 HOURS PRIOR TO THE START OF ANY EXCAVATION AS SHOWN AND NOTED ON THE APPROVED PLANS.

2. ALL CONSTRUCTION SHALL CONFORM TO ALL APPLICABLE RULES, REGULATIONS AND STANDARDS OF THE GEORGIA STATE D.O.T. (DEPARTMENT OF TRANSPORTATION), HENRY COUNTY, AND CITY OF STOCKBRIDGE.

3. UNDERGROUND UTILITY LINE LOCATIONS (IF ANY) ARE APPROX. ONLY, AND IT SHALL BE THE RESPONSIBILITY OF THE CONTRACTOR TO DETERMINE THE EXACT LOCATION OF ANY SUCH UTILITIES. UTILITIES SHOWN ON PLANS ARE FOR THE CONTRACTORS CONVENIENCE ONLY. THE ENGINEER ASSUMES NO RESPONSIBILITY TO VERIFY ALL UTILITY LOCATIONS. CONTRACTOR IS SOLELY RESPONSIBLE FOR ALL DAMAGES TO EXISTING UTILITIES. THE CONTRACTOR SHALL NOTIFY THE ENGINEER IMMEDIATELY IF ANY EXISTING UTILITIES WILL EFFECT OR IMPEDE THE PROGRESSION OR COMPLETION OF THE DESIGN INTENT OF THESE CONSTRUCTION DOCUMENTS.

4. THERE IS 100 YEAR FLOOD PLAIN ON THIS SITE PER FEMA FLOOD PLAIN COMMUNITY PANEL NUMBERS 13151C0800C DATED MAY 16, 2006 OR HENRY COUNTY PANEL 80 OF 305 DATED MAY 2010.

5. THERE ARE STATE WATERS LOCATED WITHIN 200 FT. OF THIS PROJECT SITE.

6. THE CONTRACTOR SHALL COORDINATE RELOCATION OF ANY EXISTING UTILITIES WITH THE APPROPRIATE UTILITY ENTITY PRIOR TO THE START OF ANY CONSTRUCTION.

7. THE OWNER SHALL DIRECT THE CONTRACTOR AS TO WHAT EXISTING VEGETATION ON SITE SHALL BE REMOVED BEYOND THE CLEARING LIMITS AS SHOWN AND NOTED HEREON. THE CONTRACTOR SHALL EXERCISE EXTREME CAUTION IN PROTECTING EXISTING TREES. COORDINATE ALL TREE REMOVAL WITH OWNER PRIOR TO THE START OF ANY CONSTRUCTION.

8. MISCELLANEOUS MAPPING NOTES:

   A. UTILITIES SHOWN ARE LOCATIONS OF GROUND IDENTIFIABLE ITEMS. ADDITIONAL UTILITIES MAY EXIST ABOVE OR BELOW THE GROUND. THE SURVEYOR & ENGINEER ACCEPTS NO RESPONSIBILITY FOR THE COMPLETENESS OF THIS DATA.

   B. THIS PROPERTY IS SUBJECT TO ALL RIGHT-OF-WAYS & EASEMENTS SHOWN OR NOT SHOWN, RECORDED OR NOT RECORDED.

9. THE CONTRACTOR SHALL REMOVE AND ABANDON EXISTING UTILITIES ONLY AFTER APPROVAL FROM ALL INTERESTED PARTIES. THESE FACILITIES MAY INCLUDE, BUT NOT BE LIMITED TO: EXISTING ON-SITE DRAINAGE PIPING, ON-SITE PRIVATE ELECTRICAL LINES AND APPURTENANCES, ABANDONED EROSION CONTROL DEVICES AND STRUCTURES. THE CONTRACTOR SHALL COORDINATE ANY AND ALL ABANDONMENT AND/OR RELOCATION WITH THE APPROPRIATE UTILITY COMPANIES OR ENTITY. ANY DISPOSAL OF SAID FACILITIES SHALL BE DONE IN ACCORDANCE WITH LOCAL UTILITY AND/OR GOVERNMENTAL REGULATIONS. RELOCATION AND/OR ABANDONMENT OF SAID FACILITIES AND/OR UTILITIES SHALL BE DONE AT THE EXPENSE OF THE OWNER/DEVELOPER. PERMITS (IF ANY) SHALL BE OBTAINED BY THE CONTRACTOR AND/OR OWNER/DEVELOPER.

10. IT SHALL BE THE RESPONSIBILITY OF THE CONTRACTOR TO INSURE THAT PRIOR TO ORDERING PROJECT MATERIALS, THAT THE MOST CURRENT SET OF CONSTRUCTION DOCUMENTS HAVE BEEN OBTAINED FROM THE PROJECT ENGINEER INCLUDING, BUT NOT LIMITED TO, THE PERMITTED SET(S) FROM ALL APPLICABLE AGENCIES AS APPROPRIATE. THE PROJECT ENGINEER ACCEPTS NO RESPONSIBILITY FOR IMPROPER ORDERING OF MATERIALS.

11. ALL CONSTRUCTION MUST CONFORM TOCITY OF STOCKBRIDGE AND HENRY COUNTY STANDARDS AND SPECIFICATIONS, WHETHER OR NOT REVIEW COMMENTS WERE MADE.

12. ALL SILT BARRIERS MUST BE PLACED AS ACCESS IS OBTAINED DURING CLEARING. NO GRADING SHALL BE DONE UNTIL SILT BARRIER INSTALLATION AND STORMWATER MANAGEMENT FACILITIES ARE CONSTRUCTED.

13. SILT BARRIERS TO BE PLACED AS SHOWN AND/OR AS DIRECTED BY PROJECT ENGINEER AND/OR THE HENRY COUNTY INSPECTOR.

14. NOTIFY CITY OF STOCKBRIDGE INSPECTOR 24 HOURS PRIOR TO CONSTRUCTION.

15. ALL AREAS USED AS BURIAL PITS DURING DEVELOPMENT MUST BE LOCATED OUTSIDE OF RIGHT-OF-WAY AND ARE TO BE LOCATED ON THE FINAL PLAT. GEORGIA DNR EPD REQUIREMENTS ARE TO BE MET: "NO PORTION OF WASTE DISPOSAL AREA SHALL BE LOCATED WITHIN ONE HUNDRED (100) LINEAR FEET OF ANY PROPERTY LINE OR ENCLOSED STRUCTURE."

16. THE OWNER/DEVELOPER AND ENGINEER HAVE REVIEWED THE APPROPRIATE LOCAL, STATE, AND FEDERAL REGULATIONS REGARDING DEVELOPMENT ACTIVITIES ADJACENT TO FLOOD PLAINS AND WETLANDS AND HAVE DETERMINED THAT THIS DEVELOPMENT PLAN SATISFIES THE STANDARDS PRESENTED IN APPLICABLE REGULATIONS.

17. ALL EROSION AND SEDIMENTATION CONTROLS, AND TREE PROTECTION MEASURES SHALL BE INSTALLED PRIOR TO GRADING.

18. SIGNING AND STRIPING TO BE PROVIDED BY THE CONTRACTOR ACCORDING TO M.U.T.C.D. SPECIFICATIONS.

19. ALL FILL AREAS MUST BE COMPACTED TO A MINIMUM OF 98% STANDARD PROCTOR.

20. NO WOODY VEGETATION IS ALLOWED WITHIN 15' OF THE DOWNSTREAM TOE OF EARTHEN EMBANKMENT.

21. ALL STORM PIPE AND STRUCTURES SHALL COMPLY WITH GADOT STANDARDS FOR DESIGN, CONSTRUCTION, AND INSTALLATION.

22. INVERTS ON ALL STORM STRUCTURES SHALL BE PAVED SMOOTH.

23. ALL STORMWATER STRUCTURES SHALL BE MAINTAINED BY THE PROPERTY OWNER.

24. THE CONTRACTOR SHALL BE RESPONSIBLE FOR SIGNING AND MAINTENANCE OF TRAFFIC CONTROL DURING CONSTRUCTION IN ACCORDANCE WITH THE MUTCD, GADOT, AND CITY OF STOCKBRIDGE.

STATE WATERS BUFFER NOTE:

THERE IS ESTABLISHED A 25 FOOT BUFFER ALONG THE BANKS OF ALL STATE WATERS, AS MEASURED HORIZONTALLY FROM THE POINT WHERE VEGETATION HAS BEEN WRESTED BY NORMAL STREAM FLOW OR WAVE ACTION. NO LAND DISTURBING ACTIVITIES SHALL BE CONDUCTED WITHIN A BUFFER AND A BUFFER SHALL REMAIN IN ITS NATURAL, UNDISTURBED STATE OF VEGETATION UNTIL ALL LAND DISTURBING ACTIVITIES ON THE CONSTRUCTION SITE ARE COMPLETED. ONCE THE FINAL STABILIZATION OF THE SITE IS ACHIEVED, A BUFFER MAY BE THINNED OR TRIMMED OF VEGETATION AS LONG AS A PROTECTIVE VEGETATIVE COVER REMAINS TO PROTECT WATER QUALITY AND AQUATIC HABITAT AND A NATURAL CANOPY IS LEFT IN SUFFICIENT QUANTITY TO KEEP SHADE ON THE STREAM BED; PROVIDED, HOWEVER, THAT ANY PERSON CONSTRUCTING A SINGLE FAMILY RESIDENCE, WHEN SUCH RESIDENCE IS CONSTRUCTED BY OR UNDER CONTRACT WITH THE OWNER FOR HIS OR HER OWN OCCUPANCY, MAY THIN OR TRIM VEGETATION IN A BUFFER AT ANY TIME AS LONG AS PROTECTIVE VEGETATIVE COVER REMAINS TO PROTECT WATER QUALITY AND AQUATIC HABITAT AND A NATURAL CANOPY IS LEFT IN SUFFICIENT QUANTITY TO KEEP SHADE ON THE STREAM.

GRADING NOTES: PLACEMENT AND COMPACTION

1. GROUND SURFACE PREPARATION: REMOVE VEGETATION INCLUDING GRASS, ROOTS, AND SURFICIAL ORGANICS, DEBRIS, UNSATISFACTORY SOIL MATERIALS, OBSTRUCTIONS, AND DELETERIOUS MATERIALS FROM GROUND SURFACE PRIOR TO PLACEMENT OF FILLS. PLOW STRIP, OR BREAK UP SLOPED SURFACES STEEPER THAN 1 VERT. TO 2 HORIZ. SO THAT FILL MATERIAL WILL BOND WITH EXISTING SURFACE. WHEN EXISTING GROUND SURFACE HAS A DENSITY LESS THAN THAT SPECIFIED UNDER COMPACTION FOR PARTICULAR AREA CLASSIFICATION, BREAK UP GROUND SURFACE, PULVERIZE, MOISTURE CONDITION TO OPTIMUM MOISTURE CONTENT, AND COMPACT TO REQUIRED DEPTH AND PERCENTAGE OF MAXIMUM DENSITY.

2. PLACE BACKFILL AND FILL MATERIALS IN LAYERS NOT MORE THAN 12 INCHES IN LOOSE DEPTH FOR MATERIAL COMPACTED BY HEAVY COMPACTION EQUIPMENT AND NOT MORE THAN 6 INCHES IN LOOSE DEPTH FOR MATERIAL COMPACTED BY HAND-OPERATED TAMPERS.

3. BEFORE COMPACTION, MOISTEN AND AERATE EACH LAYER AS NECESSARY TO PROVIDE OPTIMUM MOISTURE CONTENT. COMPACT EACH LAYER TO REQUIRED PERCENTAGE OF MAXIMUM DRY DENSITY OR RELATIVE DRY DENSITY FOR EACH AREA CLASSIFICATION. DO NOT PLACE BACKFILL OR FILL MATERIAL ON SURFACES THAT ARE MUDDY, FROZEN OR CONTAIN FROST OR ICE.

4. COMPACT SUBGRADE AND EACH LAYER OF BACKFILL OF FILL MAT'L TO AT LEAST 98% OF THE STANDARD PROCTOR MAXIMUM DRY DENSITY TO A DEPTH OF 6" BELOW BOTTOM OF FINAL GRADE.

5. MOISTURE CONTROL: WHERE SUBGRADE OR LAYER OF SOIL MATERIAL MUST BE MOISTURE CONDITIONED BEFORE COMPACTION, UNIFORMLY APPLY WATER TO SURFACE OF SUBGRADE OR LAYER OF SOIL MAT'L. APPLY WATER IN MINIMUM QUANTITY AS NECESSARY TO PREVENT FREE WATER FROM APPEARING ON SURFACE DURING OR SUBSEQUENT TO COMPACTION OPERATIONS.

6. REMOVE AND REPLACE, OR SCARIFY AND AIR DRY, SOIL MATERIAL THAT IS TOO WET TO PERMIT COMPACTION TO SPECIFIED DENSITY.

7. SPREAD SOIL MATERIAL THAT HAS BEEN REMOVED BECAUSE IT IS TOO WET TO PERMIT COMPACTION. ASSIST DRYING BY DISCING, HARROWING, OR PULVERIZING UNTIL MOISTURE CONTENT IS REDUCED TO A SATISFACTORY VALUE.

8. QUALITY CONTROL TESTING DURING CONSTRUCTION: ALLOW GEOTECHNICAL TESTING SERVICE TO INSPECT AND APPROVE EACH SUB-GRADE AND BACKFILL OR FILL LAYER BEFORE FURTHER BACKFILL OR CONSTRUCTION WORK IS PERFORMED. TEST SHALL BE PERFORMED EVERY 10,000 SQ. FT. OF AREA PER ONE FOOT LIFT (OR AS DIRECTED BY A REGISTERED GEOTECHNICAL ENGINEER.

9. GEOTECHNICAL SPEC'S DEPICTED HEREON ARE GUIDELINES ONLY AND SHOULD BE VERIFIED BY A REGISTERED GEOTECHNICAL ENGINEER PRIOR TO THE COMMENCEMENT OF CONSTRUCTION. RECOMMENDATIONS FROM A REGISTERED GEOTECHNICAL ENGINEER (IF ANY) SHALL SUPERSEDE THE ABOVE REFERENCED SPEC'S.

10. THE CONTRACTOR SHALL IMMEDIATELY NOTIFY THE OWNER OF THE DISCOVERY OF ANY GROUNDWATER, SUBSURFACE SEEPAGE OR SPRINGS DURING THE COURSE OF CONSTRUCTION. IT SHALL BE THE RESPONSIBILITY OF THE OWNER TO CONSULT WITH A REGISTERED GEOTECHNICAL ENGINEER TO INSPECT THE SITE, AND TO MAKE ANY RECOMMENDATIONS REGARDING EVIDENCE AND REMEDIATION (IF ANY) OF SAID SUBSURFACE WATERS.

11. ALL CUT AND FILL SLOPES (WITH THE EXCEPTION OF DETENTION AND SEDIMENT PONDS) SHALL BE LESS THAN OR EQUAL TO 2:1. POND SLOPES SHALL BE 3:1 UNLESS OTHERWISE NOTED.

12. CITY OF STOCKBRIDGE ASSUMES NO RESPONSIBILITY FOR THE OVERFLOW OR EROSION OF NATURAL DRAINS OR THE MAINTENANCE OF STORM DRAINS BEYOND THE EXTENT OF THE STREET RIGHT OF WAY.

HOW TO USE THESE DRAWINGS:

1. THE PLANS, PROFILES, DETAILS, SPECIFICATIONS AND OTHER DESIGN APPURTENANCES CONTAINED HEREIN ARE FOR INFORMATION, PERMITTING, AND CONSTRUCTION PURPOSES. THESE DOCUMENTS ARE NOT VALID FOR CONSTRUCTION UNTIL SIGNED AND SEALED BY THE ENGINEER OF RECORD AND THE APPROPRIATE PERMITS ARE OBTAINED FROM LOCAL GOVERNING AUTHORITIES.
2. ADDITIONAL PROVISIONS MAY BE REQUIRED DURING CONSTRUCTION DUE TO SITE CONDITIONS, WEATHER, OR REQUESTS BY THE INSPECTOR.
3. THE FEATURES, DISTANCES, AND ANGLES ON THESE DRAWINGS SHALL NOT BE SCALED. IF THE NECESSARY DIMENSIONS ARE NOT PROVIDED, THE CONTRACTOR SHALL NOTIFY THE OWNER OR ENGINEER FOR CLARITY.
4. PIPE LENGTHS ARE MEASURED TO THE CENTER OF THE STRUCTURES IN LINEAR HORIZONTAL FEET AND PIPE SIZES ARE MEASURED BY INSIDE DIAMETER IN INCHES UNLESS OTHERWISE NOTED.
5. THE PROPOSED GRADING SHOWN ON THESE PLANS REPRESENTS THE FINISHED SURFACE ELEVATIONS UNLESS OTHERWISE NOTED.

OWNER/CONTRACTOR ACKNOWLEDGEMENT:

1. THE PLANS, SPECIFICATIONS, AND REPORTS CONTAINED HEREIN ARE INSTRUMENTS OF FALCON DESIGN CONSULTANTS, LLC AND SHALL NOT BE COPIED, PUBLISHED, SOLD, OR OTHERWISE DISSEMINATED WITHOUT WRITTEN CONSENT BY FALCON DESIGN CONSULTANTS, LLC. UPON COMPLETION OF SAID DESIGN OR ASBUILTS, APPROVAL BY LOCAL GOVERNING AUTHORITIES, AND FULL COMPENSATION BY THE OWNER OR DEVELOPER, THESE PLANS, SPECIFICATIONS, AND REPORTS MAY BE RELEASED AT THE DISCRETION OF THE OWNER OR DEVELOPER AND THE LOCAL GOVERNING AUTHORIT. AT SUCH TIME FALCON DESIGN CONSULTANTS, LLC WILL MAKE THIS INFORMATION AVAILABLE IN PAPER OR ELECTRONIC FORMAT. ADDITIONAL FEES MAY APPLY.
2. THE EXISTING UTILITIES, TOPOGRAPHY, AND SITE FEATURES SHOWN ON THESE DRAWINGS ARE ONLY THOSE RECEIVED BY THE SURVEYOR OF RECORD. THE ENGINEER ASSUMES NO RESPONSIBILITY FOR THE COMPLETENESS OR ACCURACY OF THE EXISTING CONDITIONS. IT IS THE RESPONSIBILITY OF THE CONTRACTOR TO LOCATE ALL EXISTING UTILITIES AND FEATURES PRIOR TO CONSTRUCTION AND REPORT ANY DISCREPANCIES TO THE OWNER. THE CONTRACTOR SHALL REPAIR OR REPLACE ANY DAMAGED UTILITIES OR STRUCTURES AT HIS OWN EXPENSE AT THE SUPERVISION OF THE APPROPRIATE UTILITY DEPARTMENT.
3. THE REMOVAL OF EXISTING FEATURES ONSITE MAY REQUIRE A SEPARATE DEMOLITION PLAN AND PERMIT. THE CONTRACTOR SHALL OBTAIN THESE DOCUMENTS WHEN REQUIRED PRIOR TO COMMENCING ANY LAND DISTURBANCE ACTIVITY.
4. ALL WORK SHALL COMPLY WITH LOCAL, STATE, AND FEDERAL CODES AS APPLICABLE. THE CONTRACTOR SHALL OBTAIN ALL NECESSARY PERMITS AND LICENSES PRIOR TO COMMENCING CONSTRUCTION.

FALCON DESIGN
CIVIL ENGINEERING
COA NO. PER 004790
LAND PLANNING
SURVEYING
COA NO. LSF 000995
235 CORP. CTR. DR., STE 200
STOCKBRIDGE, GEORGIA 30281
Ph. (770) 389-8666 - Fax (770) 389-8656
CONSTRUCTION MANAGEMENT
VISIT US ON OUR WEBSITE:
www.fdc-llc.com

GENERAL NOTES
FOR
MAYS ROAD CULVERT IMPROVEMENTS
LOCATED IN:
HENRY COUNTY, GEORGIA
LAND LOT 100, 12TH DISTRICT

REVISIONS
1.
2.
3.
4.

Know what's below. Call before you dig.
UTILITIES PROTECTION CENTER
1 (800) 282-7411 THROUGHOUT GEORGIA
OR DIAL 811

DATE:	9-14-16
SCALE:	N/A
FILE NUMBER:	ENG00
DRAWN BY:	AP

GEORGIA REGISTERED No. 030440 PROFESSIONAL ENGINEER ADAM PRICE
9-14-16

GSWCC# 0000009371

THIS DOCUMENT IS NOT VALID UNLESS IT BEARS THE ORIGINAL SIGNATURE OF THE REGISTRANT ACROSS THE REGISTRANT'S SEAL.

SHEET NUMBER
2.0

FALCON DESIGN CONSULTANTS, LLC. ALL RIGHTS ARE RESERVED. ANY POSSESSION, REPRODUCTION OR OTHER USE OF THIS DOCUMENT WITHOUT PRIOR WRITTEN PERMISSION FROM FALCON DESIGN CONSULTANTS, LLC. IS EXPRESSLY PROHIBITED.

EROSION, SEDIMENTATION AND POLLUTION CONTROL NOTES:

1. THE RECEIVING WATER FOR THE PROJECT IS BIG COTTON INDIAN CREEK. CULVERT REPLACEMENT ON MAYS ROAD.

2. 24 HOUR CONTACT PERSON: MICHAEL HARRIS 770-389-7900

3. TOTAL PROJECT AREA: 0.1 ACRES. TOTAL DISTURBED AREA FOR THIS PROJECT: 0.1 ACRES (ONSITE)

4. STATE WATERS AND OR WETLANDS PER THE NATIONAL WETLANDS INVENTORY ARE LOCATED WITHIN 200 FEET OF SITE DISTURBED AREA. NON-EXEMPT ACTIVITIES SHALL NOT BE CONDUCTED WITHIN THE 25 FOOT UNDISTURBED STREAM BUFFER AS MEASURED FROM THE POINT OF WRESTED VEGETATION WITHOUT FIRST ACQUIRING THE NECESSARY VARIANCES AND PERMITS .

5. THE PRE-EXISTING RUNOFF CURVE NUMBER ON-SITE IS CN= 60. THE POST CONSTRUCTION RUNOFF CURVE NUMBER IS APPROXIMATELY CN= 61.

6. THE DESIGN PROFESSIONAL WHO PREPARED THE ES&PC PLAN, OR AN APPROVED ALTERNATE DESIGN PROFESSIONAL, WILL INSPECT THE INITIAL INSTALLATION OF THE BMP's INSTALLED ON THE SITE WITHIN 7 DAYS OF WHEN THE INITIAL CONSTRUCTION BEGINS AND ONCE NOTIFIED BY THE SITE OWNER/OPERATOR.

7. **EROSION CONTROL MEASURES WILL BE MAINTAINED AT ALL TIMES. IF FULL IMPLEMENTATION OF THE APPROVED PLAN DOES NOT PROVIDE FOR EFFECTIVE EROSION CONTROL, ADDITIONAL EROSION AND SEDIMENT CONTROL MEASURES SHALL BE IMPLEMENTED TO CONTROL OR TREAT THE SEDIMENT SOURCE. ADDITIONAL EROSION CONTROL MEASURES AND PRACTICES SHALL BE INSTALLED IF DEEMED NECESSARY BY ON-SITE INSPECTION.**

8. ANY AMENDMENTS TO THE ES&PC PLAN WHICH HAVE A SIGNIFICANT EFFECT ON BMP's WITH A HYDRAULIC COMPONENT MUST BE CERTIFIED BY THE DESIGN PROFESSIONAL AND SUBMITTED TO THE LOCAL ISSUING AUTHORITY FOR APPROVAL.

9. **NOTICE ! THE ESCAPE OF SEDIMENT FROM THE SITE SHALL BE PREVENTED BY THE INSTALLATION OF EROSION CONTROL MEASURES AND PRACTICES PRIOR TO LAND-DISTURBING ACTIVITIES.**

10. **ANY DISTURBED AREA LEFT EXPOSED FOR A PERIOD GREATER THAN 14 DAYS SHALL BE STABILIZED WITH MULCH OR TEMPORARY SEEDING.**

11. CONSTRUCTION EXIT TO BE MAINTAINED IN A CONDITION WHICH WILL PREVENT TRACKING OR FLOW OF MUD ONTO PUBLIC ROADS. CONSTRUCTION EXIT STONE SIZE TO BE A.S.T.M. 0448, SIZE #1 (1-1/2" TO 3-1/2" DIAMETER) WITH A MIN. PAD THICKNESS OF 6".

12. ALL SILT FENCE SHALL COMPLY WITH GEORGIA D.O.T. STANDARDS AND SPECIFICATIONS. THE CONTRACTOR SHALL PROVIDE A LETTER OF WARRANTY THAT MATERIALS MEET THESE SPECIFICATIONS AND THAT THE FABRIC IS ON GA. D.O.T. Q.P.L. #36.

13. NOTIFY THE LOCAL ISSUING AUTHORITY 24 HOURS PRIOR TO COMMENCING WORK. NO CLEARING, GRADING, FILLING, OR OTHER LAND DISTURBING ACTIVITIES SHALL OCCUR UNTIL APPROVED EROSION AND SEDIMENT CONTROL MEASURES HAVE BEEN INSTALLED, EXCEPT THOSE ACTIVITIES REQUIRED TO INSTALL THE NEEDED EROSION AND SEDIMENT CONTROL MEASURES. EROSION CONTROL MEASURES WILL BE CONSTRUCTED AS REQUIRED BY THE DESIGN PROFESSIONAL OR THE LOCAL ISSUING AUTHORITY, IN ACCORDANCE WITH "THE MANUAL FOR EROSION AND SEDIMENT CONTROL IN GEORGIA", LATEST EDITION. PLEASE REFER TO THE EROSION AND SEDIMENT CONTROL DETAIL SHEET FOR ADDITIONAL NOTATIONS AND MISCELLANEOUS DETAILS.

14. ALL EROSION AND SEDIMENT CONTROL MEASURES SHALL BE CONTINUOUSLY MAINTAINED BY THE OWNER/OPERATOR DURING THE ENTIRE CONSTRUCTION PROCESS. TEMPORARY MEASURES, INCLUDING SILT FENCE, CHECK DAMS, ETC., SHALL BE REMOVED ONLY AFTER PERMANENT STABILIZATION OF ALL DITCHES, SHOULDERS, SLOPES AND ALL DISTURBED AREAS IS ACCOMPLISHED. TO FACILITATE ACCEPTANCE OF THE STREETS AND IMPROVEMENTS PRIOR TO THE ESTABLISHMENT OF SUCH PERMANENT STABILIZATION, A SPECIFIC BOND IN THE AMOUNT OF A SPECIFIC PROPOSAL FOR THE COST OF MAINTAINING THE TEMPORARY CONTROL MEASURES INCLUDING TEMPORARY GRASSING AND ESTABLISHING THE PERMANENT STABILIZATION WITHIN A REASONABLE TIME RELATIVE TO THE GROWING SEASON MAY BE REQUIRED BY THE LOCAL ISSUING AUTHORITY WITH THE DEEDS AND REQUEST FOR ACCEPTANCE.

15. **POLLUTION CONTROLS:**
POLLUTION CONTROL MEASURES FOR THE SITE INCLUDE PROPER WASTE DISPOSAL, PROPER MANAGEMENT OF CHEMICAL STORAGE TANKS, EROSION FROM EGRESSES, SANITARY SEWAGE DISPOSAL AND ON-SITE VEHICLE STORAGE AND MAINTENANCE. NO DEBRIS THAT IS GENERATED WILL BE BURIED ON SITE.

(1) WASTE DISPOSAL:
SOLID MATERIALS, INCLUDING BUILDING MATERIALS, SHALL BE PROPERLY DISPOSED OF OR REMOVED FROM THE SITE TO AN APPROPRIATE LANDFILL, AND SHALL NOT BE DISCHARGED INTO WATERS OF THE STATE, EXCEPT AS AUTHORIZED BY A SECTION 404 PERMIT. CLEANUP AND DISPOSAL OF ALL WASTE MATERIALS (SOLID OR HAZARDOUS) SHALL BE IN ACCORDANCE WITH ALL RECOGNIZED LOCAL AND FEDERAL REQUIREMENTS. ALL DISPOSAL SHALL BE TO APPROVED OFF-SITE WASTE FACILITIES.

ALL PERSONNEL WILL BE INSTRUCTED REGARDING THE CORRECT PROCEDURE FOR WASTE DISPOSAL. NOTICES STATING THESE PRACTICES WILL BE POSTED IN THE APPROPRIATE ONSITE OR OFFSITE LOCATION. THE INDIVIDUAL WHO MANAGES THE DAY-TO-DAY SITE OPERATIONS WILL BE RESPONSIBLE FOR SEEING THAT THESE PROCEDURES ARE FOLLOWED.

(2) OFFSITE VEHICLE TRACKING:
OFF-SITE VEHICLE TRACKING OF DIRT, SOILS, AND SEDIMENTS AND THE GENERATION OF DUST SHALL BE MINIMIZED OR ELIMINATED TO THE MAXIMUM EXTENT PRACTICAL. A STABILIZED CONSTRUCTION ENTRANCE HAS BEEN PROVIDED TO HELP REDUCE VEHICLE TRACKING OF SEDIMENTS. THE PAVED STREET ADJACENT TO THE SITE ENTRANCE WILL BE CLEANED AS NECESSARY TO REMOVE ANY EXCESS MUD, DIRT, OR ROCK TRACKED FROM THE SITE. DUMP TRUCKS HAULING MATERIAL FROM THE CONSTRUCTION SITE WILL BE COVERED WITH A TARPAULIN ON AN AS NEEDED BASIS. A CONCRETE TRUCK WASHOUT LOCATION SHALL BE IN A TEMPORARY TRUCK WASH AREA LOCATED AT THE SITE ENTRANCE. WASHOUT SHALL BE CONTAINED WITHIN A PIT OR TRENCH WITH NO MATERIAL LEAVING THE SITE OR IMPACTING VEGETATED OR NON-DISTURBED AREAS (SEE DETAIL ON PAGE 5.1).

WASHOUT OF THE CONCRETE DRUM AT THE SITE IS PROHIBITED.

(3) SANITARY WASTE:
AS SITE CONDITIONS WARRANT, ALL SANITARY WASTE WILL BE MANAGED APPROPRIATELY BY EITHER AN ONSITE PORTABLE UNIT(S) COLLECTED AT A MINIMUM OF ONCE PER WEEK BY THE LOCAL MUNICIPALITY AND/OR STATE OF GEORGIA LICENSED SANITARY WASTE MANAGEMENT CONTRACTOR, OR WITH A MANAGEMENT PLAN THAT ROUTES INDIVIDUALS TO A LEGAL AND APPROPRIATE SANITARY WASTE FACILITY.

(4) SPILL REMEDIATION MANAGEMENT PRACTICES:
THE FOLLOWING ARE THE BEST MANAGEMENT PRACTICES THAT WILL BE USED TO REDUCE THE RISK OF SPILLS OR OTHER ACCIDENTAL EXPOSURE OF MATERIALS AND SUBSTANCES, AS WELL AS A CLEAN-UP PLAN IF NECESSARY.

RISK REDUCTION: PETROLEUM, FERTILIZERS AND PAINT PRODUCTS
· AN EFFORT WILL BE MADE TO STORE ONLY ENOUGH PRODUCT REQUIRED TO DO THE JOB.
· PRODUCTS WILL BE STORED IN THEIR ORIGINAL CONTAINERS WITH THE ORIGINAL MANUFACTURER'S LABEL, AND MUST BE KEPT OFF THE GROUND IN SECURELY FASTENED LIDS.
· SUBSTANCES WILL NOT BE MIXED WITH ONE ANOTHER UNLESS RECOMMENDED BY THE MANUFACTURER.
· WHENEVER PRACTICAL, ALL OF A PRODUCT WILL BE USED BEFORE DISPOSING OF THE CONTAINER.
· MANUFACTURER'S RECOMMENDATIONS FOR PROPER USE AND DISPOSAL WILL BE FOLLOWED.
· THE SITE SUPERINTENDENT WILL INSPECT DAILY TO ENSURE PROPER USE AND DISPOSAL OF MATERIALS.
· ORIGINAL LABELS AND MATERIAL SAFETY DATA SHEETS (MSDS) WILL BE RETAINED.
· IF SURPLUS PRODUCT MUST BE DISPOSED OF, MANUFACTURERS OR LOCAL AND STATE RECOMMENDED METHODS FOR PROPER DISPOSAL WILL BE FOLLOWED.
· ALL ONSITE VEHICLES WILL BE MONITORED FOR LEAKS AND RECEIVE REGULAR PREVENTIVE MAINTENANCE TO REDUCE THE CHANCE OF LEAKAGE.
· ALL PRODUCTS SHALL BE STORED AND USED IN AN AREA THAT PROVIDES A SECONDARY CONTAINMENT FEATURE, AND SHALL BE LOCATED IN AN AREA WITH THE LEAST FORESEEABLE IMPACT IF A CATASTROPHIC EVENT SHOULD OCCUR. FACILITIES SHOULD BE COVERED AND ACCESS RESTRICTED TO EMPLOYEES ONLY.
· FERTILIZERS USED WILL BE APPLIED ONLY IN MINIMUM AMOUNTS AS RECOMMENDED BY THE MANUFACTURER. ONCE APPLIED, FERTILIZER WILL BE WORKED INTO THE SOIL TO LIMIT EXPOSURE TO STORM WATER. THE CONTENTS OF ANY PARTIALLY USED BAGS OF FERTILIZER WILL BE TRANSFERRED TO A SEALABLE PLASTIC BIN TO AVOID SPILLS.
· KEEP FLAMMABLE LIQUIDS IN CLOSED CONTAINERS WHEN NOT IN USE.
· USE PROPER RECEPTACLES TO DISPOSE OF CONTAMINATED WASTES THAT CANNOT BE RECYCLED IN CONFORMANCE WITH FEDERAL, STATE AND/OR LOCAL REGULATIONS.
· DO NOT DUMP PETROLEUM PRODUCT WASTE, PESTICIDES, FERTILIZERS, PAINTS OR OTHER CHEMICALS INTO SEWERS, STORMDRAINS OR DRAINAGE CHANNELS.
· PREVENT SPILLS OF PETROLEUM PRODUCTS FROM OCCURRING BY TAKING SPECIAL CARE WHEN HANDLING, AND KEEP FACILITIES AND EQUIPMENT MAINTAINED.
· USE SPILL PROOF CONTAINERS AND FUNNELS WHEN TRANSFERRING FLUIDS FROM ONE CONTAINER TO ANOTHER.
· POST INFORMATIONAL MATERIALS REGARDING CHEMICAL CONTROL.

SPILL CONTROL PLAN: THE FOLLOWING PRACTICES WILL BE FOLLOWED FOR SPILL PREVENTION AND CLEANUP:
· EMERGENCY CONTACT NUMBERS FOR SPILLS SHALL BE AVAILABLE ON-SITE.
· MANUFACTURERS' RECOMMENDED METHODS FOR SPILL CLEANUP WILL BE ON SITE.
· MATERIALS AND EQUIPMENT NECESSARY FOR SPILL CLEANUP SHALL BE AVAILABLE ON-SITE.
· ALL SPILLS WILL BE CLEANED UP IMMEDIATELY AFTER DISCOVERY.
· KEEP TRAINED STAFF IN SPILL RESPONSE ON CALL.
· THE SPILL AREA WILL BE KEPT WELL VENTILATED AND PERSONNEL WILL WEAR APPROPRIATE PROTECTIVE CLOTHING TO PREVENT INJURY FROM CONTACT WITH A HAZARDOUS SUBSTANCE.
· SPILLS OF TOXIC OR HAZARDOUS MATERIAL WILL BE REPORTED TO THE APPROPRIATE LOCAL OR FEDERAL GOVERNMENT AGENCY, REGARDLESS OF THE SIZE.
· THE SPILL PREVENTION PLAN WILL BE ADJUSTED TO INCLUDE MEASURES TO PREVENT THIS TYPE OF SPILL FROM REOCCURRING AND HOW TO CLEAN UP THE SPILL IF THERE IS ANOTHER ONE. A DESCRIPTION OF THE SPILL, WHAT CAUSED IT, AND THE CLEANUP MEASURES WILL ALSO BE INCLUDED.

THE FOLLOWING MATERIALS OR SUBSTANCES ARE ANTICIPATED TO BE PRESENT ONSITE DURING CONSTRUCTION: CONCRETE AND ASPHALT; CRUSHER RUN BASE MATERIAL; DETERGENTS; PAINTS (ENAMEL AND LATEX); METAL STUDS; CONCRETE; TAR; FERTILIZERS; PETROLEUM BASED PRODUCTS; CLEANING SOLVENTS; WOOD; MASONRY BLOCK.

16. ALL PETROLEUM PRODUCTS SHALL BE STORED AND USED IN AN AREA THAT PROVIDES A SECONDARY CONTAINMENT FEATURE, AND SHALL BE LOCATED IN AN AREA WITH THE LEAST FORESEEABLE IMPACT IF A CATASTROPHIC EVENT SHOULD OCCUR. EMERGENCY CONTACT NUMBERS AND PROCEDURES FOR SPILLS SHALL BE AVAILABLE ON-SITE.

17. WASTE DISPOSAL: SOLID MATERIALS, INCLUDING BUILDING MATERIALS WILL BE DISPOSED OF OFF SITE AND THEREFORE WILL NOT BE DISCHARGED TO WATERS OF THE STATE FROM THE CONSTRUCTION SITE, EXCEPT AS AUTHORIZED BY A SECTION 404 PERMIT.

18. ALL POTENTIAL POLLUTION SOURCES WILL BE IDENTIFIED, INCLUDING PETROLEUM PRODUCT STORAGE, CONCRETE HANDLING, HERBICIDES AND ANY OTHER POLLUTANTS WHICH HAVE THE POTENTIAL TO BE EXPOSED TO RAINFALL AND BE DISCHARGED IN THE STORM WATER RUNOFF. PRACTICES WILL BE IMPLEMENTED TO ENSURE THE REDUCTION OF THESE POLLUTANTS IN STORM WATER DISCHARGES.

STRUCTURAL PRACTICES

Symbol	Practice	Label	Description
Cd	CHECKDAM		A small temporary barrier or dam constructed across a swale, drainage ditch or area of concentrated flow.
Ch	CHANNEL STABILIZATION		Improving, constructing or stabilizing an open channel, existing stream, or ditch.
Co	CONSTRUCTION EXIT	Co (Label)	A crushed stone pad located at the construction site exit to provide a place for removing mud from tires thereby protecting public streets.
Cr	CONSTRUCTION ROAD STABILIZATION	Cr	A travelway constructed as part of a construction plan including access roads, subdivision roads, parking areas, and other on-site vehicle transportation routes.
Dc	STREAM DIVERSION CHANNEL	Dc	A temporary channel constructed to convey flow around a construction site while a permanent structure is being built.
Di	DIVERSION		An earth channel or dike located above, below, or across a slope to divert runoff. This may be a temporary or permanent structure.
Dn1	TEMPORARY DOWN DRAIN STRUCTURE	Dn1 (Label)	A flexible conduit of heavy-duty fabric or other material designed to safely conduct surface runoff down a slope. This is temporary and inexpensive.
Dn2	PERMANENT DOWN DRAIN STRUCTURE	Dn2 (Label)	A paved chute, pipe, sectional conduit or similar material designed to safely conduct surface runoff down a slope.
Ga	GABION		Rock filled baskets which are hand placed into position forming soil stabilizing structures.
Gr	GRADE STABILIZATION STRUCTURE	Gr (Label)	Permanent structures installed to protect natural or artificial channels or waterways where otherwise the slope would be sufficient for the running water to form gullies.
Lv	LEVEL SPREADER		A structure to convert concentrated flow of water into less erosive sheet flow. This should be constructed only on undisturbed soils.
Rd	ROCK FILTER DAM		A permanent or temporary stone filter dam installed across small streams or drainageways.
Re	RETAINING WALL	Re (Label)	A wall installed to stabilize cut and fill slopes where maximum permissible slopes are not obtainable. Each situation will require special design.
Rt	RETROFITTING	Rt (Label)	A device or structure placed in front of a permanent storm water detention pond outlet structure to severe as a temporary sediment filter.
Sd1	SEDIMENT BARRIER	TYPE (Indicate Type)	A barrier to prevent sediment from leaving the construction site. It may be sandbags, bales or straw or hay, brush, logs and poles, gravel, or a sediment fence. The barriers are usually temporary and inexpensive.
Sd2	INLET SEDIMENT TRAP		An impounding area created by excavating around a storm drain drop inlet. The excavated area will be filled and stabilized on completion of construction activities.
Sd3	TEMPORARY SEDIMENT BASIN		A basin created by excavation or a dam across a waterway. The surface water runoff is temporarily stored allowing the bulk of the sediment to drop out. The basin is usually temporary but may be designed as a permanent pond or storm water retention device.

STRUCTURAL PRACTICES

Symbol	Practice	Label	Description
Sr	TEMPORARY STREAM CROSSING	Sr (Label)	A temporary bridge or culvert-type structure protecting a stream or watercourse from damage by crossing construction equipment.
St	STORM DRAIN OUTLET PROTECTION	St	A paved or short section of riprap channel at the outlet of a storm drain system preventing erosion from the concentrated runoff.
Su	SURFACE ROUGHENING	Su	A rough soil surface with horizontal depressions on a contour of slopes left in a roughened condition after grading.
Tp	TOP SOILING	Tp (Show Striping & Storage Areas)	The practice of stripping off the more fertile top soil, storing it, then spreading it over the disturbed area after the completion of construction activities.
Wt	VEGETATED WATERWAY OR STORM WATER CONVEYANCE CHANNEL		Paved or vegetative water outlets for diversions, terraces, berms, dikes or similar structures.

VEGETATIVE MEASURES

Symbol	Practice	Label	Description
Bf	BUFFER ZONE	Bf (Label)	An undisturbed natural "green belt" separating the land-disturbed site from surrounding property and bordering streams. It serves to reduce water velocity and remove some sediment. It is also at times a noise or "vision pollution" barrier.
Ds1	DISTURBED AREA STABILIZATION (WITH MULCHING ONLY)	Ds1	Established temporary protection for disturbed areas where seedings may not have a suitable growing season to produce an erosion retarding cover.
Ds2	DISTURBED AREA STABILIZATION (WITH TEMPORARY SEEDING)	Ds2	Establishing a temporary vegetative cover with fast growing seedings on disturbed areas.
Ds3	DISTURBED AREA STABILIZATION (WITH PERMANENT VEGETATION)	Ds3	Establishing permanent vegetative cover such as trees, shrubs, vines, grasses, sod, or legumes on disturbed areas.
Ds4	DISTURBED AREA STABILIZATION (WITH SODDING)	Ds4	A permanent vegetative cover using sods on highly erodible or critically eroded lands.
Du	DUST CONTROL ON DISTURBED AREAS	Du	Controlling surface and air movement of dust on construction sites, roadways and similar sites.
Ss	EROSION CONTROL MATTING AND BLANKETS	Ss	The installation of a protective covering (blanket) or or soil stabilization mat on a prepared planting area of a steep slope, channel, or shoreline.
Pm	POLYACRYLAMIDE (PAM)	Pm	The land application of product containing anionic polyacrylamide (PAM) as temporary soil binding agents to reduce soil erosion.
Sb	STREAMBANK STABILIZATION (USING PERMANENT VEGETATION)	Sb	The use of readily available plant materials to maintain and enhance streambanks, or to prevent, or restore and repair small streambank erosion problems.
Tb	TACKIFIERS AND BINDERS	Tb	Substance used to anchor straw or hay mulch by causing the organic material to bind together.

FOR FURTHER EXPLANATION OF THE SYMBOLS AND CONSTRUCTION PRACTICES WE REFER YOU TO THE MANUAL FOR SEDIMENTATION AND EROSION CONTROL PER THE "SEDIMENTATION AND EROSION ACT OF 1975 FOR GEORGIA."

EROSION CONTROL LEGEND

NTS

SILT STORAGE REQUIREMENTS - POI #1

DISTURBED AREA: 0.1 Ac.
REQUIRED STORAGE: 67 CY / Ac. * 0.1 = 6.7 CY

SILT STORAGE PROVIDED

AVAILABLE STORAGE (SILT FENCE): 150.0 LF.
150.0 LF. x 0.14 CY. / LF. SILT FENCE= 21.0 CY.
TOTAL SILT STORAGE PROVIDED: 21.0 CY.

CONSTRUCTION ACTIVITY SCHEDULE ESTIMATED START DATE: OCTOBER 2016

	MONTH 1	MONTH 2	MONTH 3	MONTH 4	MONTH 5	MONTH 6	MONTH 7	END OF PROJECT
INITIAL PHASE								
INSTALL CONSTRUCTION ENTRANCE, SILT FENCE, PONDS, OUTLET PROTECTION, DIVERSION DITCHES AND TREE PROTECTION FENCES	■							
CLEARING AND GRUBBING	■							
GRASSING	■							
MAINTENANCE OF EROSION, SEDIMENTATION, POLLUTION CONTROL, AND TREE PROTECTION MEASURES:	■							
INTERMEDIATE PHASE								
GRADING, STORM DRAIN INSTALLATION, SD2-F, SD2-P AND OUTLET PROTECTION		■	■					
INSTALL UNDERGROUND UTILITIES		■	■					
GRASSING		■	■					
MAINTENANCE OF EROSION, SEDIMENTATION, POLLUTION CONTROL, AND TREE PROTECTION MEASURES:		■	■					
FINAL PHASE								
CONSTRUCT BUILDING, PAVING AND SIDEWALKS				■	■	■		
FINAL LANDSCAPING AND GRASSING:						■	■	
MAINTENANCE OF EROSION, SEDIMENTATION, POLLUTION CONTROL, AND TREE PROTECTION MEASURES:				■	■	■	■	

CONTRACTOR/ DEVELOPER MAY NEED TO ADJUST SCHEDULE BASED ON SPECIFIC FIELD CONDITIONS.

FALCON DESIGN
CIVIL ENGINEERING COA NO. PER 004790
LAND PLANNING
CONSTRUCTION MANAGEMENT
VISIT US ON OUR WEBSITE: www.fdc-llc.com
SURVEYING COA NO. LSF 000995
235 CORP. CTR. DR., STE 200
STOCKBRIDGE, GEORGIA 30281
Ph. (770) 389-8666 - Fax (770) 389-8656

EROISION CONTROL NOTES
FOR
MAYS ROAD CULVERT IMPROVEMENTS
LOCATED IN:
HENRY COUNTY, GEORGIA
LAND LOT 100, 12TH DISTRICT

REVISIONS
1.
2.
3.
4.

Know what's below. Call before you dig.
UTILITIES PROTECTION CENTER
1 (800) 282-7411 THROUGHOUT GEORGIA OR DIAL 811

FALCON DESIGN CONSULTANTS, LLC. ALL RIGHTS ARE RESERVED. ANY POSSESSION, REPRODUCTION OR OTHER USE OF THIS DOCUMENT WITHOUT PRIOR WRITTEN PERMISSION FROM FALCON DESIGN CONSULTANTS, LLC. IS EXPRESSLY PROHIBITED.

DATE:	9-14-16
SCALE:	N/A
FILE NUMBER:	ENG00
DRAWN BY:	AP

GEORGIA REGISTERED No. 030440 PROFESSIONAL ENGINEER ADAM PRICE
9-14-16

GSWCC# 0000009371

THIS DOCUMENT IS NOT VALID UNLESS IT BEARS THE ORIGINAL SIGNATURE OF THE REGISTRANT ACROSS THE REGISTRANT'S SEAL.

SHEET NUMBER
2.1

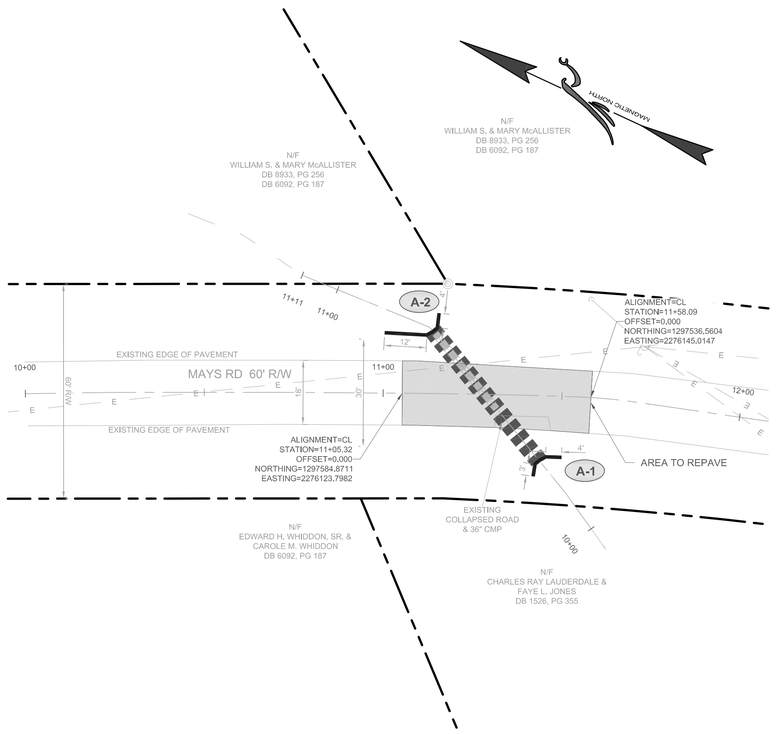

PLAN VIEW - MAYS ROAD CENTER LINE

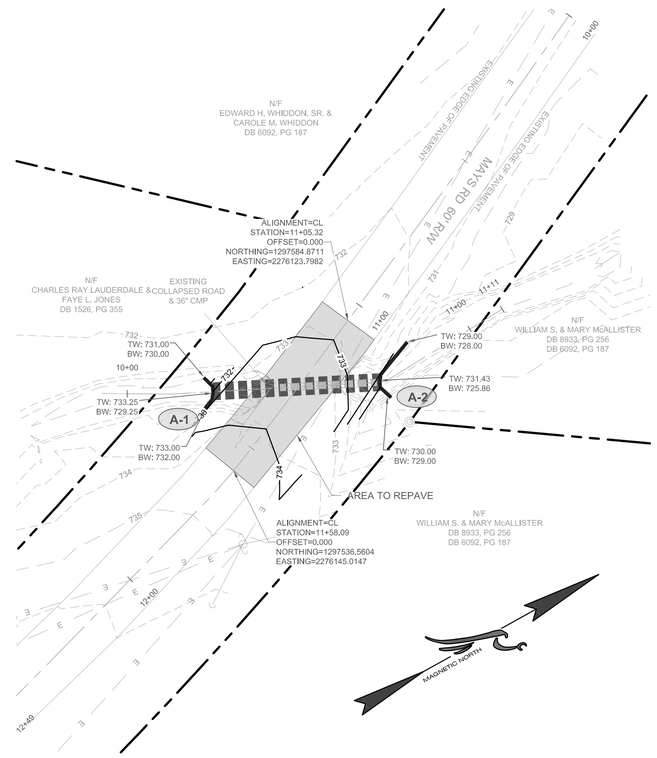

PLAN VIEW - CULVERT CENTER LINE

GRAPHIC SCALE

20 0 10 20 40

(IN FEET)
1 inch = 20 ft.

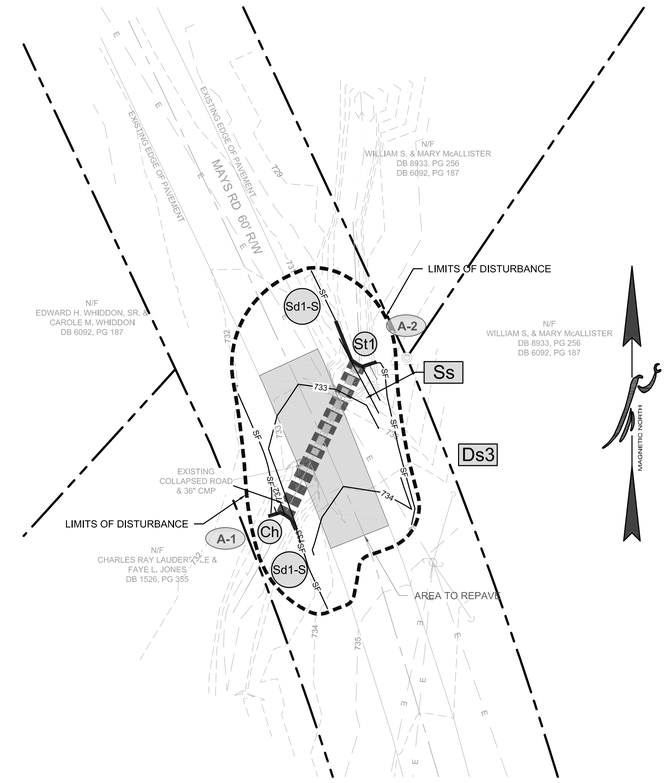

EROSION CONTROL PLAN

GRAPHIC SCALE

20 0 10 20 40

(IN FEET)
1 inch = 20 ft.

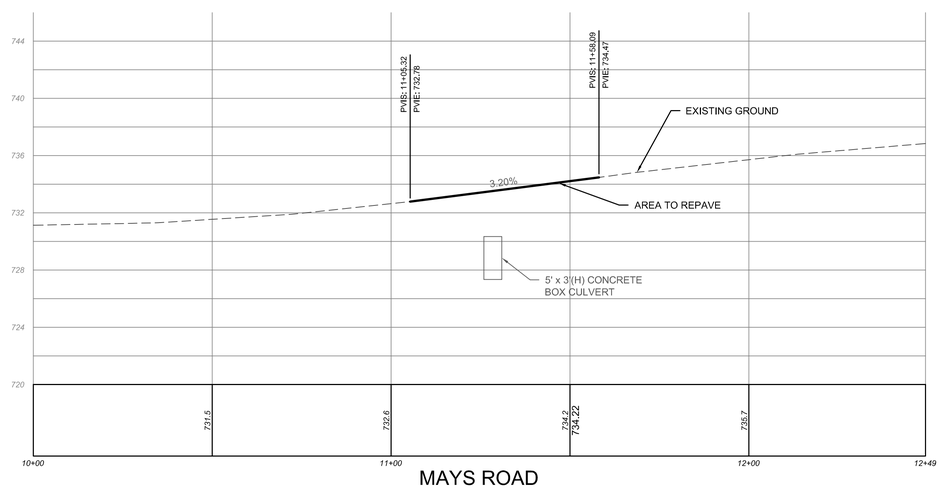

MAYS ROAD

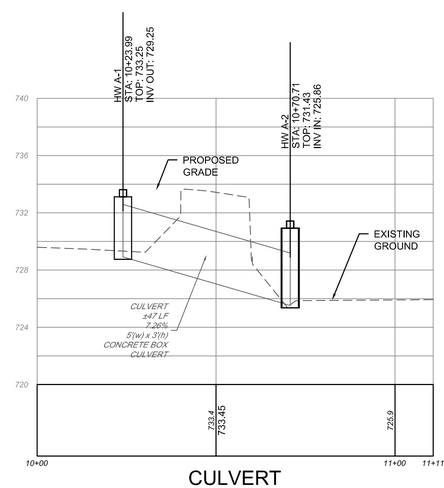

CULVERT

GRAPHIC SCALE

(HORZ.) 20 0 10 20 40
(VERT.) 5 0 5 10

(IN FEET)

OUTLET PROTECTION TABLE

OUTLET No.	Do PIPE SIZE	La (FEET)	W_1 (FEET)	W_2 (FEET)	d50 RIP-RAP SIZE	RIP-RAP AREA	VELOCITY AT END OF APRON (FPS)
A-2	60"	30.0'	15.0'	15.0'	1.0'	832 SF.	18.4

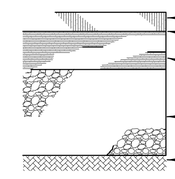

1 1/2" TYPE E OR F ASPHALT TOPPING - 165 LBS/SQ.YD

TACK COAT

2" ASPHALT BINDER - 330 LBS/SQ.YD

6" GRADED AGGREGATE BASE - 100% MAX

SUBGRADE - 95% MAX DRY DENSITY

COMPACT UPPER 2 FEET OF SUBGRADES CONSISTING OF COUNTY APPROVED FILL IN 6" COMPACTED LIFTS.

*OPTIONAL SUBSTITUTE MAY BE 5" OF SOIL CEMENT AT 35 LBS/SQ.YD AS APPROVED BY THE COUNTY ENGINEER.

PAVEMENT SECTIONS

FALCON DESIGN
LAND PLANNING
CONSTRUCTION MANAGEMENT
VISIT US ON OUR WEBSITE
www.falcon-design.com
CIVIL ENGINEERING
COA NO. PER 004396
SURVEYING
COA NO. LSF 000739
2155 SCENIC HWY, SUITE 200
STONEBRIDGE, GEORGIA 30281
P: 770-986-1111 F: 770-986-0646

SITE, GRADING, & EROSION CONTROL PLAN
FOR
MAYS ROAD CULVERT IMPROVEMENTS
LOCATED IN:
HENRY COUNTY, GEORGIA
LAND LOT 100, 12TH DISTRICT

REVISIONS
1.
2.
3.
4.

811 Know what's below. Call before you dig.
UTILITIES PROTECTION CENTER
PROTECTING GEORGIA UNDERGROUND
OR DIAL 811

DATE:	9-14-16
SCALE:	AS SHOWN
FILE NUMBER:	ENG00
DRAWN BY:	AP

GEORGIA REGISTERED No. 030440 PROFESSIONAL ENGINEER ADAM PAUL PENCE
9-14-16

GSWCC# 0000009371

THIS DOCUMENT IS NOT VALID UNLESS IT BEARS THE ORIGINAL SIGNATURE OF THE REGISTRANT ACROSS THE REGISTRANT'S SEAL.

SHEET NUMBER
3.0

FALCON DESIGN CONSULTANTS, LLC. ALL RIGHTS ARE RESERVED. ANY POSSESSION, REPRODUCTION OR OTHER USE OF THIS DOCUMENT WITHOUT PRIOR WRITTEN PERMISSION FROM FALCON DESIGN CONSULTANTS, LLC. IS EXPRESSLY PROHIBITED.

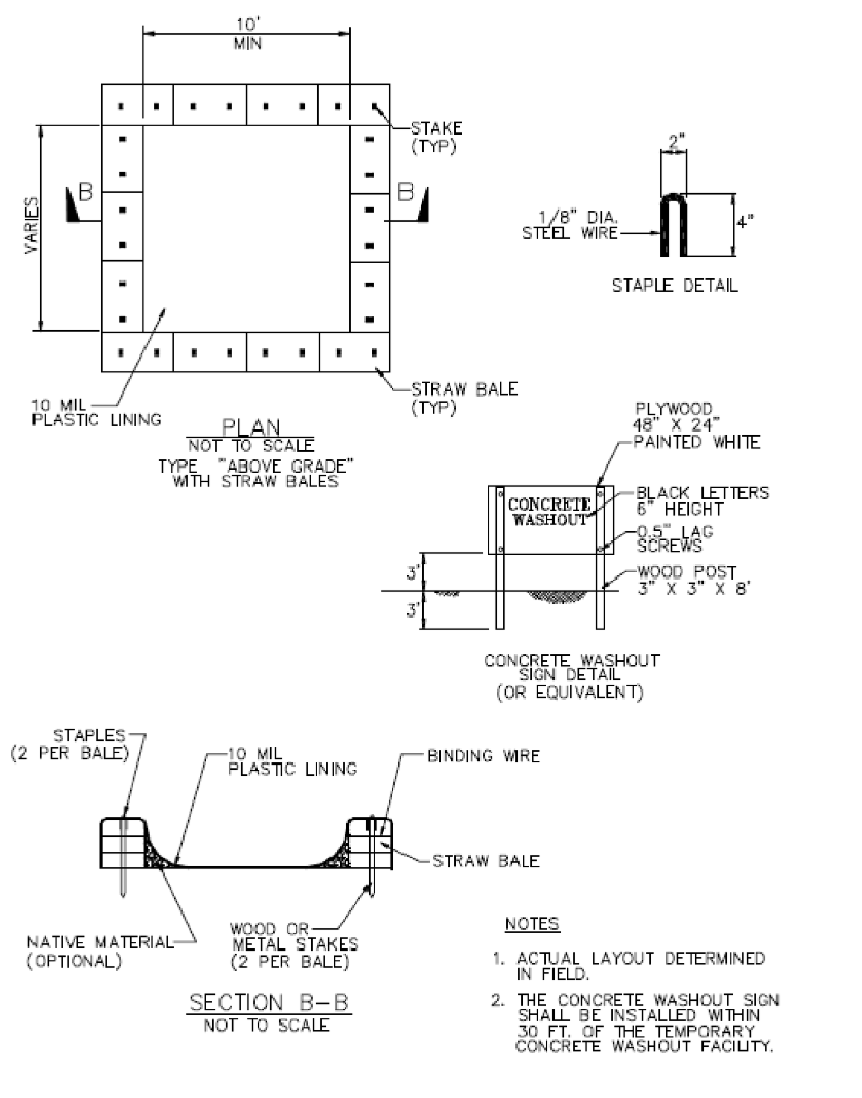

CONCRETE TRUCK WASHOUT

NTS

Ds1 DISTURBED AREA STABILIZATION (WITH MULCHING ONLY)

MATERIALS AND RATES:

MATERIAL	RATE
STRAW OR HAY	2-4" DEEP
WOOD WASTE, CHIPS, SAW DUST OR BARK	2-3" DEEP
POLYETHYLENE FILM	COMPLETELY COVER AREA

Ds2 DISTURBED AREA STABILIZATION (WITH TEMPORARY SEEDINGS)

SEEDING RATES FOR TEMPORARY SEEDINGS [1]

Species	Broadcast Rates: Rate Per Acre [2]	Pure Live Seed (PLS) Per 1000 sqft	Resource Area [3]	Planting Dates by Resource Area (J F M A M J J A S O N D) — Solid lines indicate optimum dates, dotted lines indicate permissible but marginal dates.	Remarks
BARLEY *Hordeum vulagre*					
Alone	3 bu. (144 lbs)	3.3 lbs	M-L P C		14,000 seed per pound. Winter hardy. Use on productive soils.
In Mixture	1/2 bu. (24 lbs)	0.6 lb			
LESPEDEZA, ANNUAL *Lespedeza striata*					
Alone	40 lbs	0.9 lb	M-L P C		200,000 seed per pound. May volunteer for several years. Use inoculant EL.
In Mixture	10 lbs	0.2 lb			
LOVEGRASS, WEEPING *Eragrostis curvula*					
Alone	4 lbs	0.1 lb	M-L P C		1,500,000 seed per pound. May last for several years. Mix with *Sericea lespedeza.*
In Mixture	2 lbs	0.05 lb			
MILLET, BROWNTOP *Panicum fasciculatum*					
Alone	40 lbs	0.9 lb	M-L P C		137,000 seed per pound. Quick dense cover. Will provide excessive competition in mixtures if seeded at high rate.
In Mixture	10 lbs	0.2 lb			
MILLET, PEARL *Pennesetum glaucum*					
Alone	50 lbs	1.1 lbs	M-L P C		88,000 seed per pound. Quick dense cover. May reach 5 feet in height. not recommended for mixtures.
OATS *Avena sativa*					
Alone	4 bu. (128 lbs)	2.9 lbs	M-L P C		13,000 seed per pound. Use on productive soils. Not as a winter hardy as rye or barley.
In Mixture	1 bu. (32 lbs)	0.7 lb			
RYE *Secale cereale*					
Alone	3 bu. (168 lbs)	3.9 lbs	M-L P C		18,000 seed per pound. Quick cover. Drought tolerant and winter hardy.
In Mixture	1/2 bu. (28 lbs)	0.6 lb			
RYEGRASS, ANNUAL *Lolium temulentum*					
Alone	40 lbs	0.9 lb	M-L P C		227,000 seed per pound. Dense cover. Very competitive and is not to be used in mixtures.
SUDANGRASS *Sorghum sudanese*					
Alone	60 lbs	1.4 lbs	M-L P C		55,000 seed per pound. Good on droughty sites. Not recommended for mixtures.
TRITICALE *X-Triticosecale*					
Alone	3bu. (144 lbs)	3.3 lbs	C		Use on lower part of Southern Coastal Plain and Atlantic Coastal Flatwoods only.
In Mixture	1/2 bu. (24 lbs)	0.6 lb			
WHEAT *Triticum aestivum*					
Alone	3 bu. (180 lbs)	4.1 lbs	M-L P C		15,000 seed per pound. Winter hardy.
In Mixture	1/2 bu. (30 lbs)	0.7 lb			

[1]Temporary cover crops are very competitive and will crowd out perennials if seeded too heavily.
[2]Reduce seeding rates by 50% when drilled.
[3]M-L represents the Mountain; Blue Ridge; and Ridges and Valleys MLRAs
P represents the Southern Piedmont MLRA
C represents Southern Coastall Plain; Sand Hills; Black Lands; and Atlantic Coast Flatwoods MLRAs
(see Figure 6-4.1, p. 6-40 of the Georgia Manual for Sedimentation and Erosion Control, 2014)

Ds4 DISTURBED AREA STABILIZATION (WITH SOD)

TABLE 6-6.2 SOD PLANTING REQUIREMENTS

GRASS	VARIETIES	RESOURCE AREA	GROWING SEASON
BERMUDAGRASS	COMMON TIFWAY TIFGREEN TIFLAWN	M-L, P, C P, C P, C P, C	WARM WEATHER
BAHIAGRASS	PENSACOLA	P, C	WARM WEATHER
CENTIPEDE	-	P, C	WARM WEATHER
ST. AUGUSTINE	COMMON BITTERBLUE RALEIGH	C	WARM WEATHER
ZOYSIA	EMERALD MYER	P, C	WARM WEATHER
TALL FESCUE	KENTUCKY	M-L, P	COOL WEATHER

TABLE 6-6.3
FERTILIZER REQUIREMENTS FOR SOD

TYPES OF SPECIES	PLANTING YEAR	FERTILIZER (N-P-K)	RATE (lbs./acre)	NITROGEN TOP DRESSING RATE (lbs./acre)
COOL SEASON GRASSES	FIRST SECOND MAINTENANCE	6-12-12 6-12-12 10-10-10	1500 1000 400	50-100 - 30
WARM SEASON GRASSES	FIRST SECOND MAINTENANCE	6-12-12 6-12-12 10-10-10	1500 800 400	50-100 50-100 30

Ds3 DISTURBED AREA STABILIZATION (WITH PERMANENT VEGITATION)

NOTES:
1. AGRICULTURAL LIME IS REQUIRED FOR ALL GRADED AREAS AT THE RATE OF ONE TO TWO TONS PER ACRE UNLESS SOIL TESTS DETERMINE OTHERWISE.
2. MULCHING FOR PERMANENT GRASSING IS REQUIRED. REFER TO THE "MANUAL FOR EROSION AND SEDIMENT CONTROL IN GEORGIA", 2016 EDITION, PAGES 6-38 AND 6-39.

Species	Broadcast Rates: Rate Per Acre [1]	Pure Live Seed (PLS) Per 1000 sqft [2]	Resource Area [3]	Planting Dates by Resource Area (J F M A M J J A S O N D) — Solid lines indicate optimum dates, dotted lines indicate permissible but marginal dates.	Remarks
BAHIA, PENSACOLA *Paspalum notatum*					
Alone or With Temporary Cover	60 lbs	1.4 lbs	P		166,000 seed per pound. Low growing. Sod forming. Slow to establish. Plant with a companion crop. Will spread into bermuda pastures and lawns. Mix with Sericea lespedeza or weeping lovegrass.
With Other Perennials	30 lbs	0.7 lb	C		
BAHIA, WILMINGTON *Paspalum notatum*					
Alone or With Temporary Cover	60 lbs	1.4 lb	M-L		Same as above.
With Other Perennials	30 lbs	0.7 lb	P		
BERMUDA, COMMON *Cynodon dactylon*					
Hulled Seed Alone	10 lbs	0.2 lb	P		1,787,000 seed per pound. Quick cover. Low growing and sod forming. Full sun. Good for athletic fields.
With Other Perennials	6 lbs	0.7 lb	C		
BERMUDA, COMMON *Cynodon dactylon*					
Unhulled Seed	10 lbs	0.2 lb	P		Plant with winter annuals.
With Other Perennials	6 lbs	0.1 lb	C		Plant with Tall Fescue.
BERMUDA SPRIGS *Cynodon dactylon*					
Coastal, Common, Midland, or Tift 44	40 cu ft	0.9 cu ft	M-L		A cubic foot contains approximately 650 sprigs. A bushel contains 1.25 cubic feet or approximately 800 sprigs.
Coastal, Common, or Tift 44	or		P C		
	sod plugs 3'x3'		C		Southern Coastal Plain only.
CENTIPEDE *Eremochloa ophuiroides*					
	Block sod only		P C		Drought tolerant. Full sun or partial shade. Effective adjacent to concrete and in concentrated flow areas. Irrigation is needed until fully established. Do not plant near pastures. Winter hardy as far as north Athens and Atlanta.
CROWNVETECH *Coronilla varia*					
With winter annuals or cool season grasses	15 lbs	0.3 lbs	M-L P		100,000 seed per pound. Dense growth. Drought tolerant and fire resistant. Attractive rose, pink, and white blossoms spring to late fall. Mix with 30 pounds of Tall fescue or 15 pounds of rye. Inoculate seed with M inoculant. Use from North Atlanta and Northward.
Alone					
FESCUE, TALL *Festuca arundinacea*					
with other perennials	50 lbs 30 lbs	1.1 lbs 0.7 lbs	M-L P		227,000 seed per pound. Use alone only on better sites. Mix with perennial lespededza or crownvetch. Apply topdressing in spring following fall plantings. Not for heavy use areas or athletic fields.
Pueraria thumbergiana					
Plants or crowns	3' - 7' apart		ALL		Rapid and vigorous growth. Excellent in gully erosion control. Will climb good livestock forage.
LESPEDEZA SERICEA *Lespedeza cuneata*					
	60 lbs	1.4 lbs	M-L P C		350,000 seed per pound. Widely adapted. Low maintenance. Mix with weeping lovegrass, common bermuda, bahia, or tall fescue. Takes 2 to 3 years to become fully established. Excellent on roadbanks. Inoculate seed with EL inoculant.
	75 lbs	1.7 lbs	M-L P C		Mix with all fesue or winter annuals.
seed-bearing hay	3 tons	1338 lbs	M-L P C		Cut when seed mixture is mature but before it shatters. Add tall fescue or winter annuals.
LESPEDEZA Ambro virgata *Lespedeza virgata DC or* Appalow *Lespedeza cuneata (Dumont G. Don)*					
	60 lbs	1.4 lbs	M-L P C		350,000 seed per pound. Height of growth is 18 to 24 inches. Advantageous in urban areas. Spreading-type growth. New growth has bronze coloration. mix with weeping lovegrass, common bemuda, tall fescue or winter annuals. Do not mix with Sericea lespedeza. Slow to develop solid stands. inoculate seed with EL inoculant.
	75 lbs	1.7 lbs	M-L P		
LESPEDEZA *Lespedeza biocolor Lespedeza thumbergii*					
plants	3' x 3'		M-L P C		Provide wildlife food and cover.
LOVEGRASS, WEEPING *Eragrostis curvula*					
alone	4 lbs	0.1 lb	M-L P C		1,500,000 seed per pound. Quick cover. Drought tolerant. Grows well with Sericea lespedeza on roadbanks.
with others perennials	2 lbs	0.05 lb			
MAIDENCANE *Panicum hemitomon*					
sprigs	2' x 3' spacing		ALL		For very wet sites. May clog channels. Dig sprigs from local sources. Use along river banks and shorelines.
PANICGRASS, ATLANTIC COASTAL *Panicum amarum var amarukum*					
	20 lbs	0.5 lb	P C		Grow well on coastal sand dunes, borrow areas and gravel pits. Provide winter cover for wildlife. Mix with Sericea lespedeza except on sand dunes.
REED CANARY GRASS *Phalaris arundinacea*					
alone	50 lbs	1.1 lb	M-L P		Grow well on coastal sand dunes, borrow areas and gravel pits. Provide winter cover for wildlife. Mix with Sericea lespedeza except on sand dunes.
with other perrenials	30 lbs	0.7 lb			
SUNFLOWER, 'AZTEC' MAXIMILLIAN *Helianthus maximiliani*					
	10 lbs	0.2 lb	M-L P C		227,000 seed per pound. Mix with weeping lovegrass or other low-growing grasses or legumes.

[1]Reduce seeding rates by 50% when drilled.
[2]PLS is an abbreviation for Pure Live Seed. Refer to Section V.E. of these specifications.
[3]M-L represents the Mountain; Blue Ridge; and Ridges and Valleys MLRAs
P represents the Southern Piedmont MLRA
C represents Southern Coastall Plain; Sand Hills; Black Lands; and Atlantic Coast Flatwoods MLRAs
(see Figure 6-4.1, p. 6-40 of the Georgia Manual for Sedimentation and Erosion Control, 2014)

Dust Control on Disturbed Areas

Du

DEFINITION

Controlling surface and air movement of dust on construction sites, roads, and demolition sites.

PURPOSE

- To prevent surface and air movement of dust from exposed soil surfaces.
- To reduce the presence of airborne substances which may be harmful or injurious to human health, welfare, or safety, or to animals or plant life.

CONDITIONS

This practice is applicable to areas subject to surface and air movement of dust where on and off-site damage may occur without treatment.

METHOD AND MATERIALS

A. Temporary Methods

Mulches. See standard **Ds1 - Disturbed Area Stabilization (With Mulching Only)**. Synthetic resins may be used instead of asphalt to bind mulch material. Refer to specification **Tac - Tackifiers**. Resins such as Curasol or Terratack should be used according to manufacturer's recommendations.

Vegetative Cover. See specification **Ds2 - Disturbed Area Stabilization (With Temporary Seeding)**.

Spray-on Adhesives. These are used on mineral soils (not effective on muck soils). Keep traffic off these areas. Refer to specification **Tac - Tackifiers**.

Tillage. This practice is designed to roughen and bring clods to the surface. It is an emergency measure which should be used before wind erosion starts. Begin plowing on windward side of site. Chisel-type plows spaced about 12 inches apart, spring-toothed harrows, and similar plows are examples of equipment which may produce the desired effect.

Irrigation. This is generally done as an emergency treatment. Site is sprinkled with water until the surface is wet. Repeat as needed.

Barriers. Solid board fences, snowfences, burlap fences, crate walls, bales of hay and similar material can be used to control air currents and soil blowing. Barriers placed at right angles to prevailing currents at intervals of about 15 times their height are effective in controlling wind erosion.

Calcium Chloride. Apply at rate that will keep surface moist. May need retreatment.

B. Permanent Methods

Permanent Vegetation. See specification **Ds3 -Disturbed Area Stabilization (With Permanent Vegetation)**. Existing trees and large shrubs may afford valuable protection if left in place.

Topsoiling. This entails covering the surface with less erosive soil material. See specification **Tp - Topsoiling**.

Stone. Cover surface with crushed stone or coarse gravel. See specification **Cr-Construction Road Stabilization**.

GSWCC (Amended - 2013) 6-107

TYPICAL INSTALLATION GUIDELINES FOR ROLLED EROSION CONTROL PRODUCTS (RECP)

Ss

BLANKET AND MATTING CROSS-SECTIONS

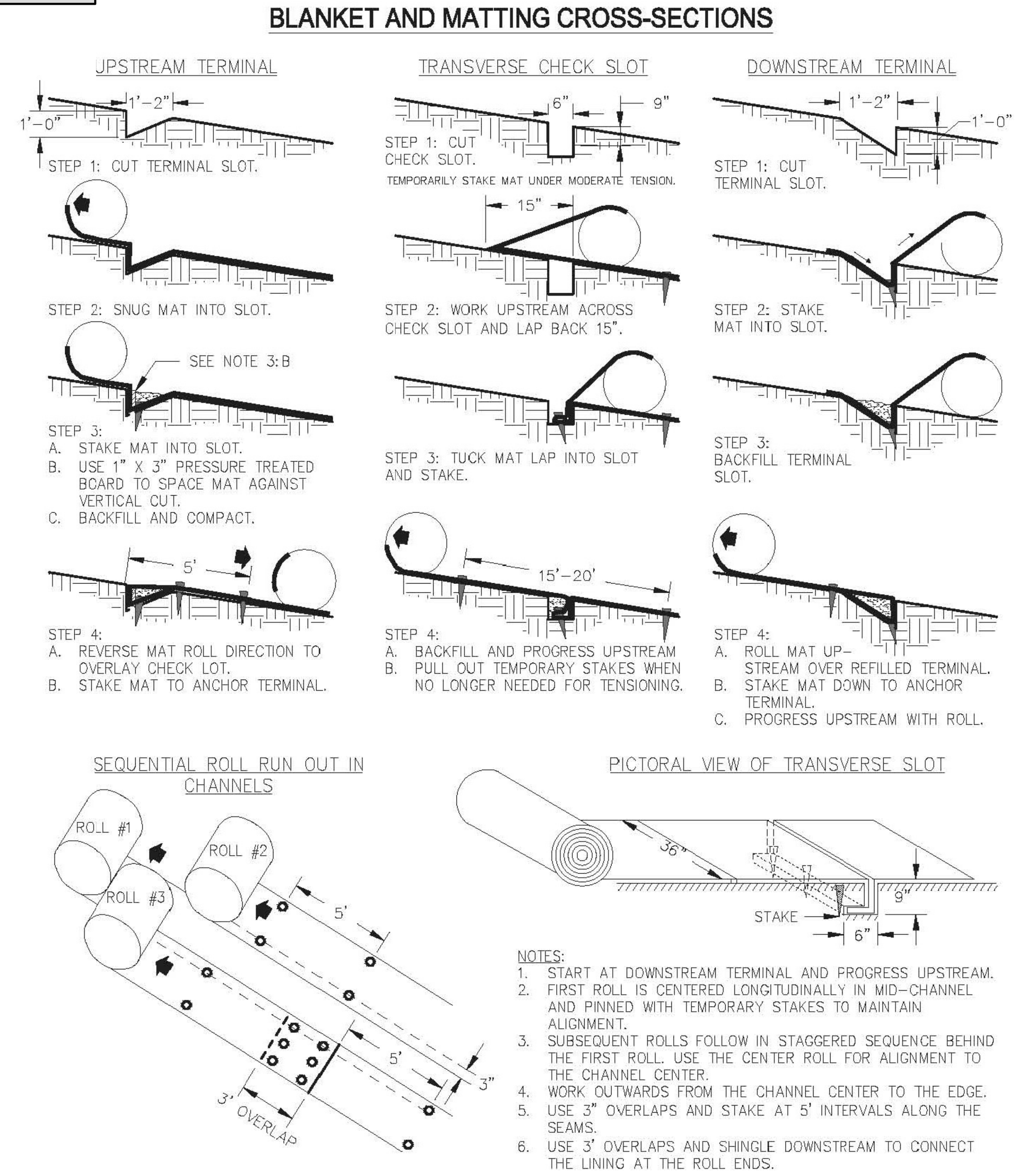

Figure 6-10.1 - Typical Installation Guidelines for Matting and Blankets

6-123 GSWCC (Amended - 2013)

FALCON DESIGN
CIVIL ENGINEERING COA NO. PER 004790
LAND PLANNING
CONSTRUCTION MANAGEMENT
VISIT US ON OUR WEBSITE: www.fdc-llc.com
SURVEYING COA NO. LSF 000995
235 CORP. CTR. DR., STE 200
STOCKBRIDGE, GEORGIA 30281
Ph. (770) 389-8666 - Fax (770) 389-8656

EROSION CONTROL DETAILS
FOR
MAYS ROAD CULVERT IMPROVEMENTS
LOCATED IN:
HENRY COUNTY, GEORGIA
LAND LOT 100, 12TH DISTRICT

REVISIONS

1.	
2.	
3.	
4.	

Know what's below. Call before you dig.
UTILITIES PROTECTION CENTER
1 (800) 282-7411 THROUGHOUT GEORGIA
OR DIAL 811

DATE:	9-14-16
SCALE:	N/A
FILE NUMBER:	ENG00
DRAWN BY:	AP

GEORGIA REGISTERED No. 030440 PROFESSIONAL ENGINEER ADAM PRICE 9-14-16

GSWCC# 0000009371

THIS DOCUMENT IS NOT VALID UNLESS IT BEARS THE ORIGINAL SIGNATURE OF THE REGISTRANT ACROSS THE REGISTRANT'S SEAL.

SHEET NUMBER
4.0

FALCON DESIGN CONSULTANTS, LLC. ALL RIGHTS ARE RESERVED. ANY POSSESSION, REPRODUCTION OR OTHER USE OF THIS DOCUMENT WITHOUT PRIOR WRITTEN PERMISSION FROM FALCON DESIGN CONSULTANTS, LLC. IS EXPRESSLY PROHIBITED.

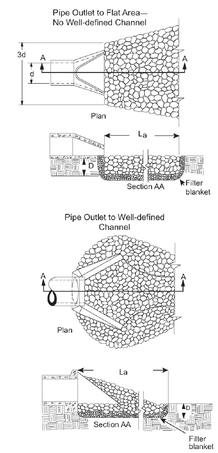

Notes

1. L_a is the length of the riprap apron.
2. D = 1.5 times the maximum stone diameter but not less than 6".
3. In a well-defined channel extend the apron up the channel banks to an elevation of 6" above the maximum tailwater depth of to the top of the bank, whichever is less.
4. A filter blanket or filter fabric should be installed between the riprap and soil foundation.

St **Figure 6-24.3 - Riprap Outlet Protection (Modified From Va SWCC)**

Sd1-S

SILT FENCE - TYPE SENSITIVE

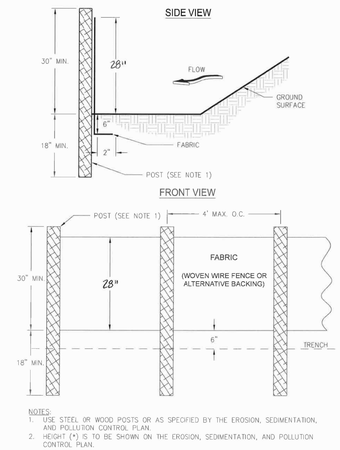

NOTES:
1. USE STEEL OR WOOD POSTS OR AS SPECIFIED BY THE EROSION, SEDIMENTATION, AND POLLUTION CONTROL PLAN.
2. HEIGHT (*) IS TO BE SHOWN ON THE EROSION, SEDIMENTATION, AND POLLUTION CONTROL PLAN.

Figure 6-27.2

Channel Stabilization

Ch

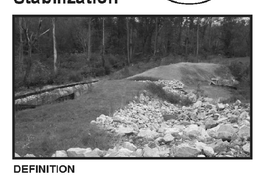

DEFINITION

Improving, constructing or stabilizing an open channel for water conveyance.

PURPOSE

Open channels are constructed or stabilized to be non-erosive, with no sediment deposition and to provide adequate capacity for flood water, drainage, other water management practices, or any combination thereof.

CONDITIONS

This standard applies to the improvement, construction or stabilization of open channels and existing ditches with drainage areas less than one square mile. This standard applies only to channels conveying intermittent flow, not to channels conveying a continuous, live stream.

An adequate outlet for the modified channel length must be available for discharge by gravity flow. Construction or other improvements of the channel should not adversely affect the environmental integrity of the area and must not cause significant erosion upstream or flooding and/or sediment deposition downstream.

DESIGN CRITERIA

Planning

The alignment and design of channels shall give careful consideration to the preservation of valuable fish and wildlife habitat and trees of significant value for wildlife food or shelter or for aesthetic purposes.

Where channel construction will adversely affect significant fish or wildlife habitat, mitigation measures should be included in the plan. Mitigation measures may include pools, riffles, flats, cascades or other similar provisions.

As many trees as possible are to be left inside channel rights-of-way considering the requirements of construction, operation, and maintenance.

Unusually large or attractive trees shall be preserved.

Realignment

The realignment of channels shall be kept to an absolute minimum and should be permitted only to correct an adverse environmental condition.

Channel Capacity

The capacity for open channels shall be determined by procedures applicable to the purposes to be served.

Hydraulic Requirements

Manning's formula shall be used to determine velocities in channels. The "n" values for use in this formula shall be estimated using currently accepted guides along with knowledge and experience regarding the conditions. Acceptable guides can be found in hydrology textbooks.

Channel Cross-Section

The required channel cross-section and grade are determined by the design capacity, the materials in which the channel is to be constructed, and the requirements for maintenance. A minimum depth may be required to provide adequate outlets for subsurface drains and tributary channels.

Channel Stability

All channel construction, improvement and modification shall be in accordance with a design expected to result in a stable channel that can be maintained.

Characteristics of a Stable Channel

1. Aggradation or degradation does not interfere with the function of the channel or affect adjacent areas.

LAND PLANNING
CIVIL ENGINEERING
CON NO. PER 006796
FALCON DESIGN
CONSTRUCTION MANAGEMENT
VISIT US ON OUR WEBSITE
www.falcon-design.com
SURVEYING
CON NO. LSF 000797
2155 CHESTNUT STREET, SUITE 200
STOCKBRIDGE, GEORGIA 30281
PH: (770) 389-9009 FAX: (770) 389-9666

EROSION CONTROL DETAILS
FOR
MAYS ROAD CULVERT
IMPROVEMENTS
LOCATED IN:
HENRY COUNTY, GEORGIA
LAND LOT 100, 12TH DISTRICT

REVISIONS
1.
2.
3.
4.

811
Know what's **below.**
Call before you dig.
UTILITIES PROTECTION CENTER
PROTECTING GEORGIA
OR DIAL 811

DATE:	9-14-16
SCALE:	N/A
FILE NUMBER:	ENG00
DRAWN BY:	AP

GEORGIA REGISTERED No. 030440 PROFESSIONAL ENGINEER
9-14-16

GSWCC# 0000009371

THIS DOCUMENT IS NOT VALID UNLESS IT BEARS THE ORIGINAL SIGNATURE OF THE REGISTRANT ACROSS THE REGISTRANT'S SEAL.

SHEET NUMBER
4.1

FALCON DESIGN CONSULTANTS, LLC. ALL RIGHTS ARE RESERVED. ANY POSSESSION, REPRODUCTION OR OTHER USE OF THIS DOCUMENT WITHOUT PRIOR WRITTEN PERMISSION FROM FALCON DESIGN CONSULTANTS, LLC. IS EXPRESSLY PROHIBITED.

STATE	PROJECT NUMBER	SHEET NO.	TOTAL SHEETS
GA.			

CULVERT SIZE		DESIGN I-A 2 FT. MINIMUM COVER					DESIGN I-B 3 FT. MINIMUM COVER						CULVERT SIZE
CLEAR SPAN (FT.)	CLEAR HEIGHT (FT.)	T	MINIMUM AREAS OF CIRCUMFERENTIAL REINFORCING STEEL (SQ.IN. PER LIN. FT.)			MAXIMUM FILL HEIGHTS (FEET)	MINIMUM AREA OF CIRCUMFERENTIAL REINFORCING STEEL (SQ.IN. PER LIN.FT.)			MAXIMUM FILL HEIGHTS (FEET)	T	CLEAR HEIGHT (FT.)	CLEAR SPAN (FT.)
S	H	(INCHES)	A_{S1}	A_{S2}	A_{S4}		A_{S1}	A_{S2}	A_{S4}		(INCHES)	H	S
4'	3	6	0.21	0.27	0.12	16	0.13	0.18	0.12	10	6	3	4'
	4	6	0.18	0.30	0.12	16	0.12	0.19	0.12	10	6	4	
	5	6	0.24	0.33	0.14	16	0.15	0.23	0.14	10	6	5	
	6	7	0.27	0.37	0.17	16	0.20	0.27	0.17	10	7	6	
5'	3	6	0.26	0.29	0.14	16	0.17	0.21	0.14	10	6	3	5'
	4	6	0.24	0.33	0.14	16	0.16	0.23	0.14	10	6	4	
	5	6	0.20	0.35	0.14	16	0.14	0.25	0.14	10	6	5	
	6	7	0.25	0.39	0.17	16	0.18	0.29	0.17	10	7	6	
6'	3	7	0.32	0.33	0.17	16	0.23	0.23	0.17	10	7	3	6'
	4	7	0.27	0.37	0.17	16	0.20	0.27	0.17	10	7	4	
	5	7	0.25	0.39	0.17	16	0.18	0.29	0.17	10	7	5	
	6	7	0.23	0.41	0.17	16	0.17	0.30	0.17	10	7	6	
7'	4	8	0.35	0.41	0.19	16	0.25	0.27	0.19	10	8	4	7'
	5	8	0.31	0.44	0.19	16	0.23	0.29	0.19	10	8	5	
	6	8	0.28	0.42	0.19	14	0.21	0.34	0.19	10	8	6	
	7	8	0.26	0.44	0.19	14	0.19	0.36	0.19	10	8	7	
8'	4	8	0.43	0.40	0.19	10	0.33	0.30	0.19	8	8	4	8'
	5	8	0.38	0.43	0.19	10	0.30	0.33	0.19	8	8	5	
	6	8	0.35	0.47	0.19	10	0.27	0.35	0.19	8	8	6	
	7	8	0.33	0.50	0.19	10	0.25	0.38	0.19	8	8	7	
	8	8	0.31	0.53	0.19	10	0.24	0.43	0.19	8	8	8	
9'	4	9	0.47	0.45	0.22	10	0.38	0.38	0.22	8	9	4	9'
	5	9	0.43	0.45	0.22	10	0.35	0.39	0.22	8	9	5	
	6	9	0.40	0.48	0.22	10	0.32	0.42	0.22	8	9	6	
	7	9	0.37	0.52	0.22	10	0.30	0.45	0.22	8	9	7	
	8	9	0.35	0.54	0.22	10	0.28	0.47	0.22	8	9	8	
	9	9	0.33	0.57	0.22	10	0.27	0.49	0.22	8	9	9	
	10	10	0.35	0.61	0.24	10	0.30	0.55	0.24	8	10	10	
10'	4	10	0.50	0.46	0.24	10	0.44	0.42	0.24	8	10	4	10'
	5	10	0.47	0.46	0.24	10	0.41	0.42	0.24	8	10	5	
	6	10	0.44	0.50	0.24	10	0.38	0.45	0.24	8	10	6	
	7	10	0.41	0.53	0.24	10	0.35	0.48	0.24	8	10	7	
	8	10	0.38	0.56	0.24	10	0.33	0.51	0.24	8	10	8	
	9	10	0.36	0.60	0.24	10	0.32	0.53	0.24	8	10	9	
	10	10	0.35	0.61	0.24	10	0.30	0.55	0.24	8	10	10	

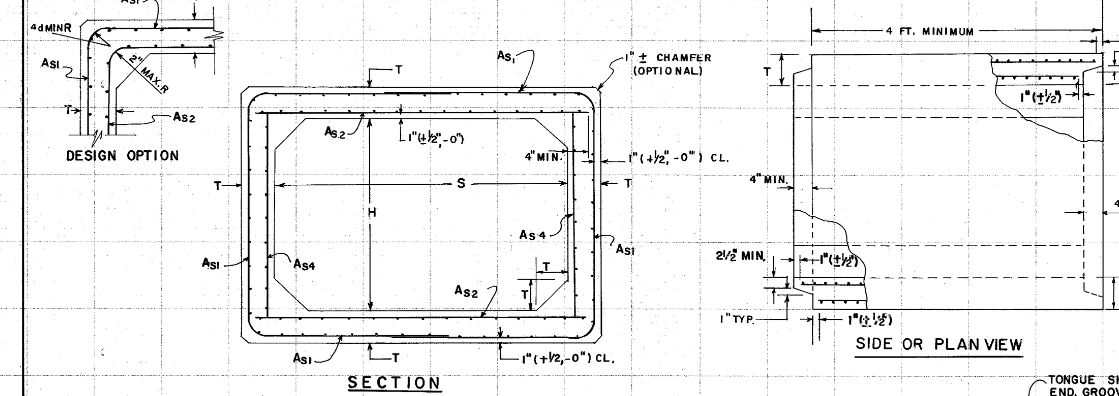

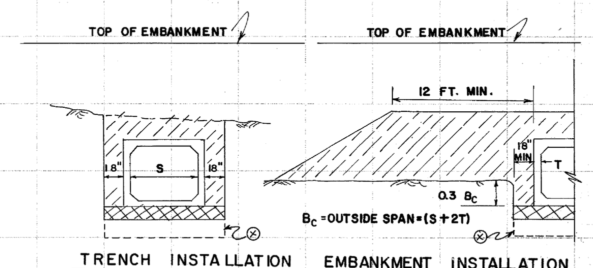

TRENCH INSTALLATION EMBANKMENT INSTALLATION

MINIMUM TRENCH DEPTH = 0.3 B_C + BEDDING DEPTH

—6" MIN. DEPTH OF FOUNDATION BACKFILL MATERIAL TYPE II FOR WET AREAS OR 3" MIN. DEPTH FOUNDATION BACKFILL MATERIAL TYPE I OTHERWISE. TYPE I AND II MATERIAL BOTH MAY BE USED IF SPECIFIED. CLASS I SOIL SHALL BE REQUIRED FOR TYPE I BACKFILL MATERIAL.

—NORMAL BACKFILL COMPACTED IN 6" LAYERS BROUGHT UP EVENLY ON BOTH SIDES OF CULVERT FROM TOP OF BEDDING TO MINIMUM REQUIRED COVER.

⊗ FOR AN INCOMPRESSABLE FOUNDATION, INCREASE TRENCH UNDER BOX TO 12" MINIMUM, WHERE AN UNSTABLE MATERIAL IS ENCOUNTERED, ADDITIONAL EXCAVATION AND BACKFILLING TO DEPTHS AND WIDTHS SPECIFIED BY THE ENGINEER IS REQUIRED.

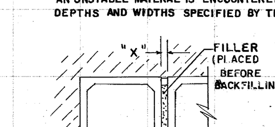

TYPICAL FILLERS	
MATERIALS ALTERNATES	SPACE "X"
GROUT	2" ±
CL. B CONC.	4" ±

NOTE: PAYMENT FOR CULVERT INCLUDE FILLER.

THE DIMENSION "X" SHALL BE COMPATABLE WITH CULVERT END TREATMENT AND APRON WIDTHS, SPACERS SHALL BE USED BETWEEN BOXES IF BACKFILLED BEFORE FILLER SETS UP.

MULTIPLE LINE

NOTE: A CULVERT COMBINATION HAVING A TOTAL CLEAR SPAN & HEIGHT EQUAL TO OR EXCEEDING THAT SPECIFIED MAY BE SUBSTITUTED. EXAMPLE: A TRIPLE 6'x6' MAY BE SUBSTITUTED FOR A DOUBLE 9'x 6' OR VICE VERSA.

GENERAL NOTES:

1. SPECIFICATIONS: GA. STANDARD, CURRENT EDITION, AND SUPPLEMENTS THERETO, CONCRETE SHALL CONFORM TO SECTION 843, 5000 P.S.I. MINIMUM.
2. REINFORCING REQUIREMENTS NOT SHOWN SHALL BE ACCORDING TO A.A.S.H.T.O. M-259, MINIMUM CLEARANCE FOR CIRCUMFERENTIAL REINFORCEMENT SHALL BE 1", WITH LESS THAN 1" OF CLEARANCE BEING CAUSE FOR REJECTION.
3. ALL JOINTS BETWEEN PRECAST SECTIONS SHALL BE TONGUE & GROOVE WITH JOINT MATERIAL. JOINTS BETWEEN CAST-IN-PLACE AND PRECAST SECTIONS SHALL HAVE LONGITUDINAL STEEL EXTENDING FROM TOP, BOTTOM AND BOTH SIDE SLABS OF THE PRECAST BOX TIED TO THE CAST-IN-PLACE REINFORCEMENT.
4. CULVERTS LARGER THAN THE SPECIFIED SIZE MAY BE SUBSTITUTED WITH PAYMENT BEING BASED UPON THE SPECIFIED SIZE RATHER THAN THE SUBSTITUTION, SUCH A SUBSTITUTION MUST BE APPROVED BY THE ENGINEER, MINIMUM COVER MUST BE RETAINED AND NO ADVERSE EFFECTS PRODUCED.
5. ALTERNATES: CAST-IN-PLACE BOX CULVERTS OR OTHER APPROVED PRECAST DESIGNS.
6. LOADING: HS-20 AND ANY FILL HEIGHTS BETWEEN THE MINIMUM AND MAXIMUM SHOWN.
7. ONLY ONE DESIGN OF PRECAST BOX CULVERT IS TO BE USED FOR ANY INSTALLATION.

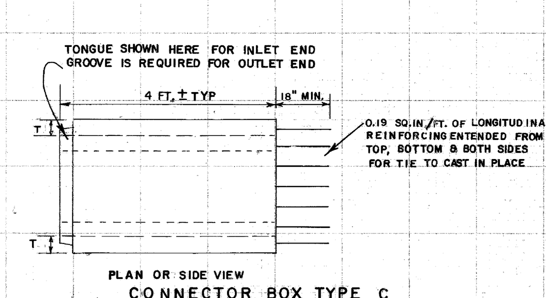

CONNECTOR BOX TYPE C
(USE FOR CONNECTION TO CAST-IN-PLACE)

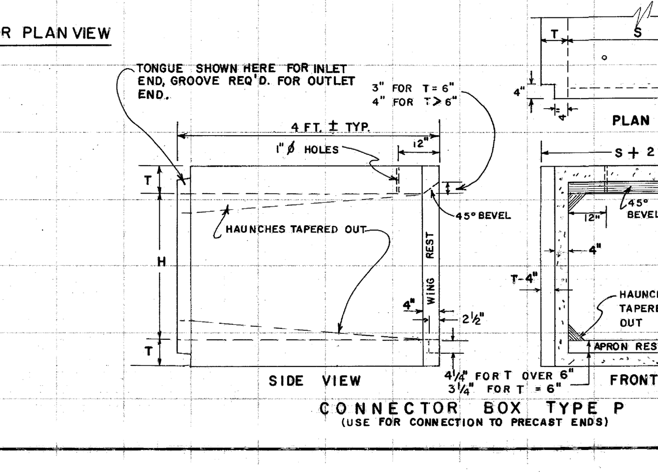

CONNECTOR BOX TYPE P
(USE FOR CONNECTION TO PRECAST ENDS)

FORM EF00003

	DEPARTMENT OF TRANSPORTATION
	STATE OF GEORGIA
	STANDARD
	PRECAST BOX CULVERT BARRELS
	4' x 3' THRU 10' x 10'
	SINGLE & MULTIPLE LINES
6-27-85 DATE / 4' JT. DEPTH MIN. REVISION / MADE / R.M.U. BY	NO SCALE — MARCH, 1985
DES. R.M.U. DRW. R.M.U. TRA. G.M.E. CHK. R.K.C.	(SUBMITTED) [signature] STATE ROAD & AIRPORT DESIGN ENGR (APPROVED) [signature] STATE HIGHWAY ENGINEER — NUMBER 2530P

STATE	PROJECT NUMBER	SHEET NO.	TOTAL SHEETS
GA.			

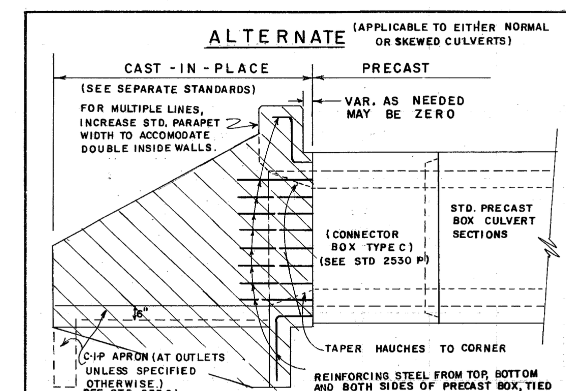

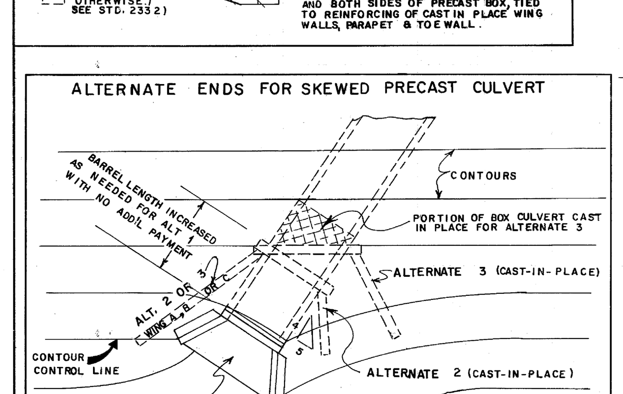

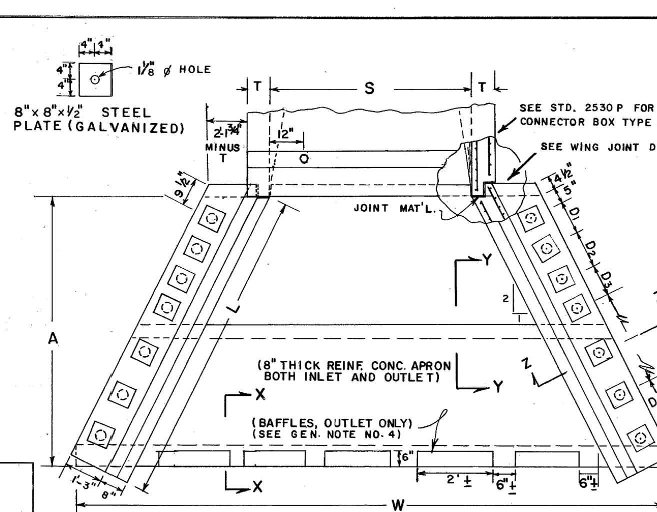

NOTE: EACH PARAPET SHALL BE BOLTED TO BOX WITH TWO-¾"∅ GALV. BOLTS WITH 2 GALV. WASHERS WITH EACH BOLT (FURNISHED BY MANUFACTURER)

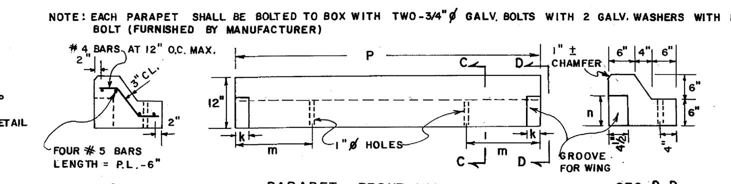

TABLE 1 - PARAPET DIMENSIONS				
S	K	m	n	P
4'	2"	1'-6"	9"	5'-0"
5'	2"	1'-6"	8"	6'-0"
6'	3"	1'-7"	7"	7'-2"
7'	4"	1'-8"	7"	8'-4"
8'	4"	1'-8"	7"	9'-4"
9'	5"	1'-9"	6"	10'-6"
10'	6"	1'-10"	5"	11'-8"

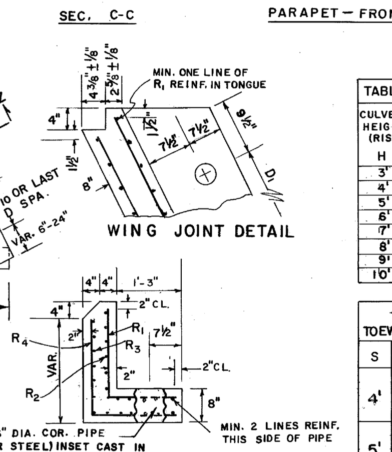

TABLE 2 - WINGWALL DIMENSIONS, ANCHOR SPACINGS, WINGWALL & APRON REINFORCING

CULVERT HEIGHT (RISE)	APRON	WINGWALL (±1") DIMENSIONS			MAX. SPACINGS (INCHES) FOR WINGWALL TO APRON ANCHOR CONNECTIONS EACH WING. SEE NOTE #3 (±1/2")										▼STEEL AREAS SQ. IN./LIN.FT.	
H	A	L	h_1	h_2	D_1	D_2	D_3	D_4	D_5	D_6	D_7	D_8	D_9	D_{10}	R_1	R_2
3'	6'	6'-8"	2'-6"	1'-6"	48"	66"									0.19	0.19
4'	8'	9'-2"	3'-8"	1'-6"	48"	66"									0.19	0.19
5'	8'	9'-2"	3'-8"	2'-6"	48"	66"									0.19	0.19
6'	12'	13'-4"	5'-4"	1'-10"	31"	48"	66"								0.20	0.19
7'	12'	13'-4"	5'-4"	2'-10"	20"	31"	31"	48"	66"						0.32	0.19
8'	16'	18'-4"	7'-4"	1'-10"	15"	20"	20"	31"	48"	66"					0.48	0.19
9'	16'	18'-4"	7'-4"	2'-10"	12"	12"	15"	15"	20"	20"	31"	48"	66"		0.68	0.19
10'	16'	18'-4"	7'-4"	3'-10"	12"	12"	12"	12"	15"	15"	20"	20"	31"	48"	0.93	0.19

▼STEEL AREAS FOR R_3, R_4, R_5 & R_6 SHALL BE THE SAME AS FOR R_2

TABLE 3-* TOEWALL WIDTHS		
S	H	W (±¼")
4'	3	13'-7½"
	4	15'-7½"
	5	15'-7½"
	6	19'-7½"
5'	3	14'-7½"
	4	16'-7½"
	5	16'-7½"
	6	20'-7½"
6'	3	15'-7½"
	4	17'-7½"
	5	17'-7½"
	6	21'-7½"
7'	4	18'-7½"
	5	18'-7½"
	6	22'-7½"
	7	22'-7½"
8'	4	19'-7½"
	5	19'-7½"
	6	23'-7½"
	7	23'-7½"
	8	27'-7½"
9'	4	20'-7½"
	5	20'-7½"
	6	24'-7½"
	7	24'-7½"
	8	28'-7½"
	9	28'-7½"
	10	28'-7½"
10'	4	21'-7½"
	5	21'-7½"
	6	25'-7½"
	7	25'-7½"
	8	29'-7½"
	9	29'-7½"
	10	29'-7½"

*NOTE: WIDTHS ARE FOR SINGLE LINES; FOR MULTIPLE LINES ADD S + 2T + "X" FOR EACH ADDITIONAL LINE; WHERE S = CLEAR SPAN, T = WALL THICKNESS, & "X" = SPACE BETWEEN LINES.

GENERAL NOTES:

1. SPECIFICATION: GA. STANDARD, CURRENT EDITION & SUPPLEMENTS THERETO.
2. MATERIALS FOR PRECAST PARAPETS, PRECAST WINGWALLS AND PRECAST APRONS SHALL BE 5000 P.S.I. CONCRETE (SEC. 500) AND WELDED WIRE FABRIC OR GRADE 60 REBARS. CAST-IN-PLACE CONSTRUCTION SHALL BE CLASS "A" CONCRETE AND GRADE 40 REBARS.
3. ALL PRECAST WINGWALLS (BOTH INLET & OUTLET) REQUIRE 8" THICK REINFORCED CONCRETE APRONS FOR ANCHOR-CONNECTIONS. APRONS MAY BE PRECAST OR CAST IN PLACE. SPACINGS (IN TABLE 2) FOR WINGWALL TO APRON CONNECTIONS ARE MAXIMUM AND MAY BE REDUCED DUE TO WING LENGTH, APRON JOINTS, ETC. EACH APRON SECTION MUST HAVE A MINIMUM OF 2 CONNECTIONS ON EACH SIDE OR AS REQUIRED BY TABLE 2, WHICHEVER IS MORE.
4. OUTLET BAFFLES SHALL BE CL.A CONCRETE MIN. REINFORCED WITH NO. 4 REBARS, BAFFLES MAY BE FIELD CAST ONTO NO. 4 REBARS GROUTED 6" MIN. INTO APRON OR PRECAST BAFFLES MAY BE SECURED TO APRON BY GROUTING BARS EXPOSED FROM BAFFLES INTO APRON 6" MIN. OR SECURED WITH NO. 4 GALV. EXPANSION ANCHOR BOLTS. 2 DOWEL CONNECTIONS OR 2 ANCHORS SHALL BE REQUIRED FOR EACH SEPARATE BAFFLE OR BAFFLES MAY BE CONSTRUCTED MONOLITHIC WITH APRON.
5. SEE STANDARD 2530P FOR DETAILS OF PRECAST BOX CULVERTS AND CONNECTOR BOXES TYPE P & TYPE C
6. LIFTING HOLES AND HANDLING DEVICES SHALL BE ACCORDING TO GA. STD. SPECIFICATIONS AND MAY VARY PER MANUFACTURER. PRECAST SECTIONS ARE NOT TO BE LIFTED BY OR THRU THE PIPE SLEEVE INSETS.
7. PRECAST ENDS ARE STANDARD ALTERNATES FOR SINGLE OR FOR MULTIPLE LINE PRECAST BOX CULVERT BARRELS NORMAL TO THE ROADWAY. SKEWED INSTALLATIONS MAY HAVE PRECAST ENDS WHERE ROADSIDE GEOMETRICS ARE COMPATABLE. THE ALLOWANCE OF PRECAST ENDS WITH SKEWED PRECAST BARRELS, EITHER SINGLE OR MULTIPLE LINE, SHALL BE AS SHOWN IN THE PLANS OR APPROVED BY THE ENGINEER FOR A GIVEN LOCATION. CAST-IN-PLACE ENDS (SEE SEPARATE STANDARDS) SHALL BE USED FOR EITHER SKEWED OR NON-SKEWED PRECAST BARRELS WHERE PRECAST ENDS ARE NOT USED.

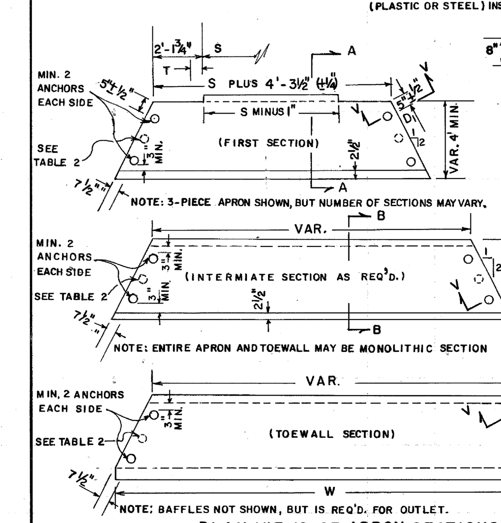

PLAN VIEWS OF APRON SECTIONS

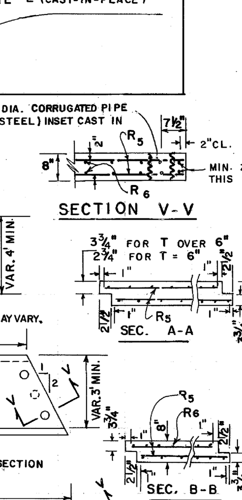

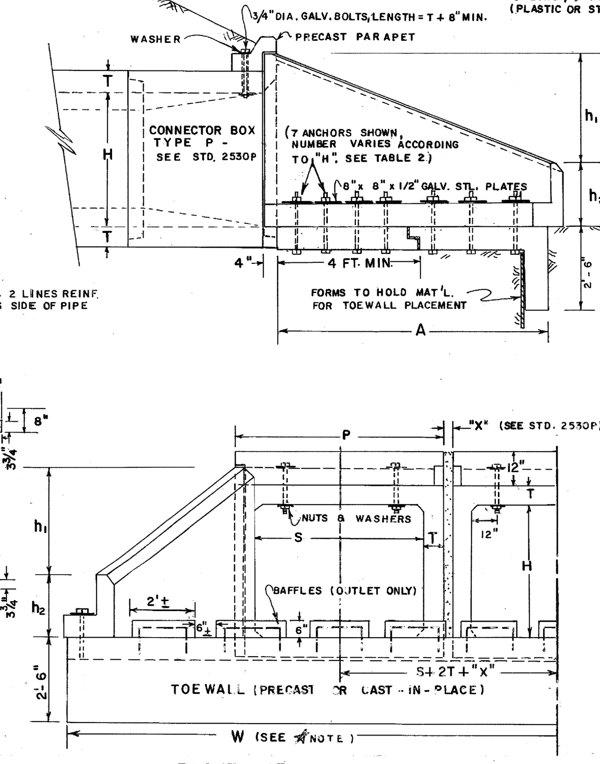

FRONT VIEW (SHOWN FOR MULTIPLE LINE)

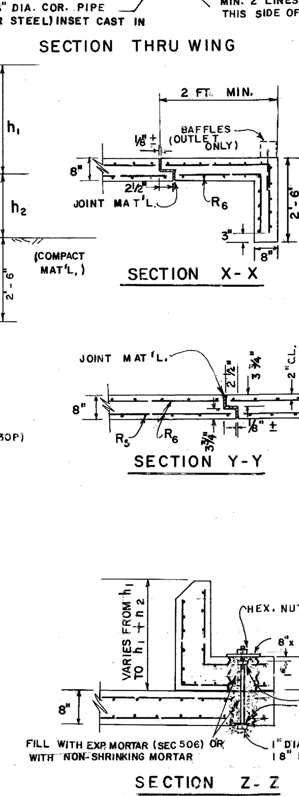

	DEPARTMENT OF TRANSPORTATION
	STATE OF GEORGIA
	STANDARD
	PRECAST BOX CULVERT ENDS
	WINGWALLS, PARAPETS, TOEWALLS & APRONS
	NO SCALE — MARCH, 1985
DES. R.M.U. DRW. R.M.U. TRA. G.M.E. CHK. R.K.C.	(SUBMITTED) [signature] STATE ROAD & AIRPORT DESIGN ENGR. (APPROVED) [signature] STATE HIGHWAY ENGINEER — NUMBER 2535P

FORM EF00003

STATE	PROJECT NUMBER	SHEET NO.	TOTAL SHEETS
GA.			

STORM DRAIN AND UTILITY INSTALLATION BY OPEN CUT - GENERAL

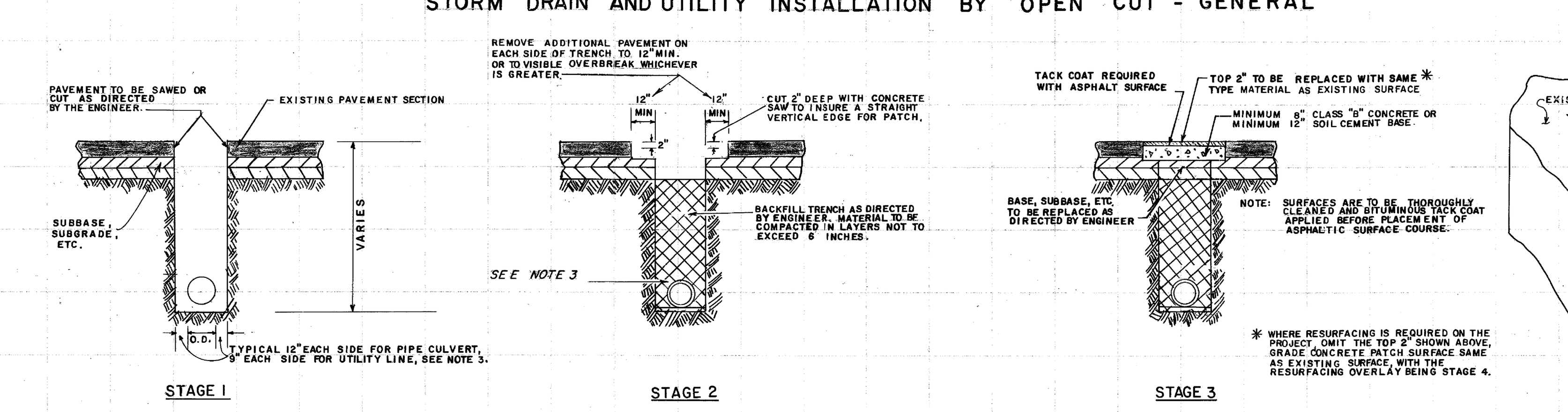

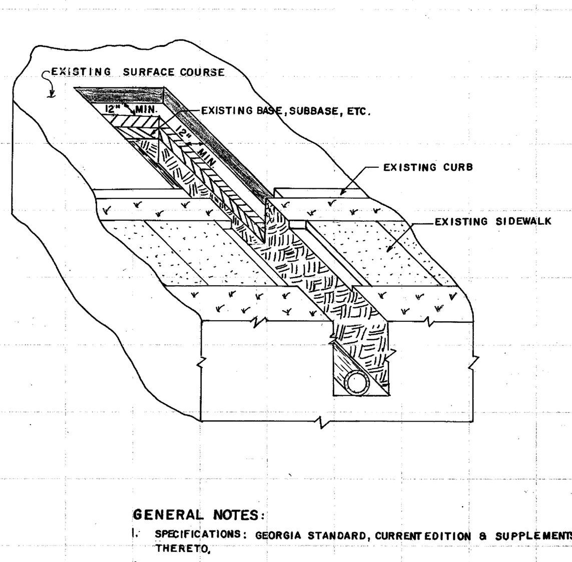

STORM DRAIN AND UTILITY INSTALLATION BY OPEN CUT ACROSS P.C. CONCRETE PAVING

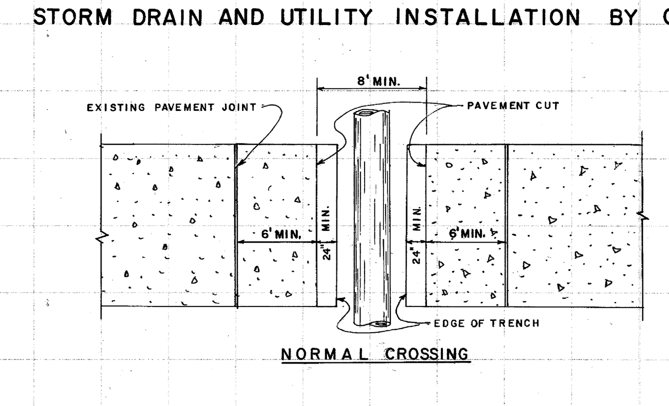

NORMAL CROSSING

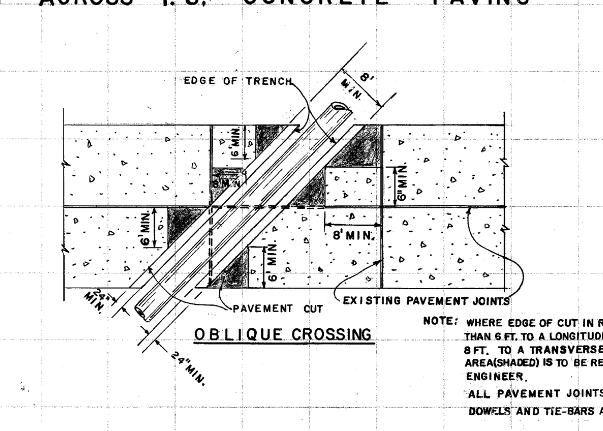

OBLIQUE CROSSING

NOTE: WHERE EDGE OF CUT IN RIGID PAVEMENT IS CLOSER THAN 6 FT. TO A LONGITUDINAL JOINT, OR CLOSER THAN 8 FT. TO A TRANSVERSE JOINT, ALL PAVEMENT IN THAT AREA (SHADED) IS TO BE REPLACED AS DIRECTED BY THE ENGINEER.
ALL PAVEMENT JOINTS ARE TO BE RE-ESTABLISHED.
DOWELS AND TIE-BARS ARE TO BE REPLACED.

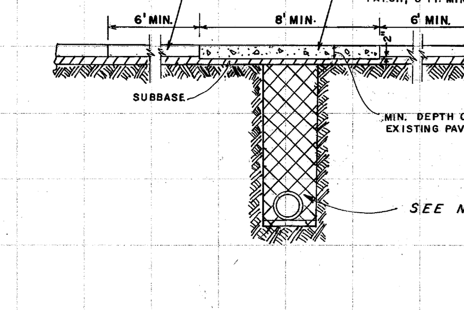

NOTE:
WHEN THE CONCRETE IS POURED, IT SHALL BE STRUCK OFF AT AN ELEVATION SLIGHTLY HIGHER THAN THE INTENDED SURFACE AND TAMPED TO OFFSET SHRINKAGE. MECHANICAL VIBRATING EQUIPMENT SHALL BE USED TO CONSOLIDATE THE PLACED CONCRETE, ESPECIALLY AT THE EDGES AND AROUND THE STEEL AT JOINTS. THE CONCRETE SHALL THEN BE TAMPED A SECOND TIME, THEN SCREEDED AND CHECKED WITH A STRAIGHT EDGE TO GIVE THE SAME SURFACE GRADE AS THE EXISTING PAVEMENT.

GENERAL NOTES:

1. SPECIFICATIONS: GEORGIA STANDARD, CURRENT EDITION & SUPPLEMENTS THERETO.
2. (a) OTHER PAVEMENT REPLACEMENT MATERIALS, SUCH AS HIGH EARLY STRENGTH CONCRETE, MAY BE SUBSTITUTED FOR MATERIALS SHOWN WHEN CALLED FOR IN THE PLANS OR BY THE ENGINEER.
   (b) PAYMENT FOR PIPE CULVERT OR UTILITY SHALL INCLUDE SAWING AND/OR CUTTING AND REMOVING EXISTING PAVEMENT AND REPLACING THE PAVEMENT AS SPECIFIED. PAYMENT FOR PIPE OR UTILITY INCLUDES THIS PAVEMENT REPLACEMENT MATERIAL, REGARDLESS OF WHERE MATERIALS SHOWN ARE USED OR WHERE OTHER MATERIALS SUCH AS HIGH EARLY STRENGTH CONCRETE ARE USED.
   (c) PAYMENT FOR PIPE CULVERT OR UTILITY INSTALLATION SHALL INCLUDE REPLACING IN KIND ANY PORTIONS OF SIDEWALK, CURB, CURB & GUTTER, MEDIAN PAVING, DRIVEWAYS, ETC., WHICH ARE DISTURBED DUE TO THE INSTALLATION.
3. TRENCH DETAIL SHOWN IS GENERAL. SEE STANDARD 1030D FOR DETAILS REQUIRED FOR PIPE CULVERT INSTALLATIONS. SEE THE UTILITIES MANUAL FOR UTILITY INSTALLATION REQUIREMENTS.
4. AFTER REMOVING EXISTING PAVEMENT, THE SUBBASE AND VERTICAL FACE OF EXISTING PAVING SHALL BE DAMPED (BUT NOT WET). ADDITIONALLY, THE VERTICAL FACE OF THE EXISTING PAVEMENT SHALL BE PAINTED WITH A SOLUTION OF PORTLAND CEMENT AND WATER MIXED TO THE CONSISTANCY OF HEAVY PAINT. THE CONCRETE MIX SHALL THEN BE POURED BEFORE THIS SURFACE DRIES OUT. AFTER CONCRETE IS POURED, IT SHALL BE WORKED INTO ALL CORNERS AND INTO ALL ROUGH SURFACES OF THE EXISTING PAVEMENT.
5. WHERE PIPE IS REMOVED, BUT NOT REPLACED, PAYMENT FOR PIPE REMOVAL INCLUDES ALL ITEMS DESCRIBED IN GENERAL NOTE 2., WITH ALL OTHER NOTES AND DETAILS ALSO BEING APPLICABLE.

NOTE:
THIS STANDARD IS FOR USE WHERE PERMANENT PAVEMENT PATCHING IS REQUIRED. TEMPORARY PATCHING, IF REQUIRED, SHALL BE ACCORDING TO OTHER DETAILS, SPECIFICATIONS, AND/OR AS DIRECTED BY THE ENGINEER.

	DEPARTMENT OF TRANSPORTATION
	STATE OF GEORGIA
5-24-85 / ADD NOTE 5	STANDARD
	PAVEMENT PATCHING DETAILS (STORM DRAIN OR UTILITY INSTALLATIONS BY OPEN CUT ACROSS EXISTING PAVEMENT)
	NO SCALE — APRIL, 1984
R.M.U. REV. RMU TRA. GME CHK. RKC	(SUBMITTED) [signature] STATE ROAD & AIRPORT DESIGN ENGR. (APPROVED) [signature] STATE HIGHWAY ENGINEER — NUMBER 1401

FORM EF00003

CIVIL ENGINEERING
COA NO. PER 004790

LAND PLANNING

FALCON DESIGN

CONSTRUCTION MANAGEMENT

VISIT US ON OUR WEBSITE: www.fdc-llc.com

SURVEYING
COA NO. LSF 000995

235 CORP. CTR. DR., STE 200
STOCKBRIDGE, GEORGIA 30281
Ph. (770) 389-8666 - Fax (770) 389-8656

CONSTRUCTION DETAILS
FOR
MAYS ROAD CULVERT IMPROVEMENTS
LOCATED IN:
HENRY COUNTY, GEORGIA
LAND LOT 100, 12TH DISTRICT

REVISIONS

1.
2.
3.
4.

Know what's below. Call before you dig.
UTILITIES PROTECTION CENTER
1 (800) 282-7411 THROUGHOUT GEORGIA OR DIAL 811

DATE:	9-14-16
SCALE:	N/A
FILE NUMBER:	ENG00
DRAWN BY:	AP

GEORGIA REGISTERED No. 030440 PROFESSIONAL ENGINEER ADAM PRICE 9-14-16

GSWCC# 0000009371

THIS DOCUMENT IS NOT VALID UNLESS IT BEARS THE ORIGINAL SIGNATURE OF THE REGISTRANT ACROSS THE REGISTRANT'S SEAL.

SHEET NUMBER
5.0

FALCON DESIGN CONSULTANTS, LLC. ALL RIGHTS ARE RESERVED. ANY POSSESSION, REPRODUCTION OR OTHER USE OF THIS DOCUMENT WITHOUT PRIOR WRITTEN PERMISSION FROM FALCON DESIGN CONSULTANTS, LLC. IS EXPRESSLY PROHIBITED.

P:\Projects\013.005 Mayes Rd. Culvert Improvements\Engineering\Mayes Rd ENG00.dwg, DTL-CONST (1), sustarsic, Sep 14, 2016 - 2:50:08pm